NetApp® Filers
F630, F740, and F760
Cluster Conversion Guide

Network Appliance, Inc.
2770 San Tomas Expressway
Santa Clara, CA 95051, USA
Tel: +1 408 367-3000
Fax: +1 408 367-3151
Support tel: (888) 4-NETAPP
Support email: support@netapp.com
Information email: info@netapp.com
Web: http://www.netapp.com

Part number 210-02244
December 1998

Copyright and trademark information

Copyright information

Copyright © 1998 Network Appliance, Inc. All rights reserved. Printed in the U.S.A.

No part of this book covered by copyright may be reproduced in any form or by any means—graphic, electronic, or mechanical, including photocopying, recording, taping, or storage in an electronic retrieval system—without prior written permission of the copyright owner.

Portions of this product are derived from the Berkeley Net2 release and the 4.4-Lite-2 release, which are copyrighted and publicly distributed by The Regents of the University of California.

Copyright © 1980–1995 The Regents of the University of California. All rights reserved.

Portions of this product are derived from NetBSD, which is copyrighted and publicly distributed by Carnegie Mellon University.

Copyright © 1994, 1995 Carnegie Mellon University. All rights reserved. Author Chris G. Demetriou.

Permission to use, copy, modify, and distribute this software and its documentation is hereby granted, provided that both the copyright notice and its permission notice appear in all copies of the software, derivative works or modified versions, and any portions thereof, and that both notices appear in supporting documentation.

CARNEGIE MELLON ALLOWS FREE USE OF THIS SOFTWARE IN ITS “AS IS” CONDITION. CARNEGIE MELLON DISCLAIMS ANY LIABILITY OF ANY KIND FOR ANY DAMAGES WHATSOEVER RESULTING FROM THE USE OF THIS SOFTWARE.

Software derived from copyrighted material of The Regents of the University of California, Carnegie Mellon University, and Network Appliance are subject to the following license and disclaimer:

Redistribution and use in source and binary forms, with or without modification, are permitted provided that the following conditions are met:

1. Redistributions of source code must retain the above copyright notices, this list of conditions, and the following disclaimer.
2. Redistributions in binary form must reproduce the above copyright notices, this list of conditions, and the following disclaimer in the documentation and/or other materials provided with the distribution.
3. All advertising materials mentioning features or use of this software must display the following acknowledgment:

   This product includes software developed by the University of California, Berkeley and its contributors.
4. Neither the name of the University nor the names of its contributors may be used to endorse or promote products derived from this software without specific prior written permission.

THIS SOFTWARE IS PROVIDED BY THE REGENTS AND CONTRIBUTORS “AS IS” AND ANY EXPRESS OR IMPLIED WARRANTIES, INCLUDING, BUT NOT LIMITED TO, THE IMPLIED WARRANTIES OF MERCHANTABILITY AND FITNESS FOR A PARTICULAR PURPOSE ARE DISCLAIMED. IN NO EVENT SHALL THE REGENTS OR CONTRIBUTORS BE LIABLE FOR ANY DIRECT, INDIRECT, INCIDENTAL, SPECIAL, EXEMPLARY, OR CONSEQUENTIAL DAMAGES (INCLUDING, BUT NOT LIMITED TO, PROCUREMENT OF SUBSTITUTE GOODS OR SERVICES; LOSS OF USE, DATA, OR PROFITS; OR BUSINESS

INTERRUPTION) HOWEVER CAUSED AND ON ANY THEORY OF LIABILITY, WHETHER IN CONTRACT, STRICT LIABILITY, OR TORT (INCLUDING NEGLIGENCE OR OTHERWISE) ARISING IN ANY WAY OUT OF THE USE OF THIS SOFTWARE, EVEN IF ADVISED OF THE POSSIBILITY OF SUCH DAMAGE.

Network Appliance reserves the right to change any products described herein at any time, and without notice. Network Appliance assumes no responsibility or liability arising from the use of products described herein, except as expressly agreed to in writing by Network Appliance. The use and purchase of this product do not convey a license under any patent rights, trademark rights, or any other intellectual property rights of Network Appliance.

The product described in this manual may be protected by one or more U.S. patents, foreign patents, or pending applications.

RESTRICTED RIGHTS LEGEND: Use, duplication, or disclosure by the government is subject to restrictions as set forth in subparagraph (c)(1)(ii) of the Rights in Technical Data and Computer Software clause at DFARS 252.277-7103 (October 1988) and FAR 52-227-19 (June 1987).

Trademark information

Network Appliance, NetCache, Data ONTAP, SmartSAN, SnapCopy, Snapshot, WAFL, Web Filer, FilerView, BareMetal, and SecureShare are trademarks of Network Appliance, Inc. FAServer, NetApp, and the Network Appliance logo are registered trademarks of Network Appliance, Inc.

All other brands or products are trademarks or registered trademarks of their respective holders and should be treated as such.

Communications regulation information

Compliance

This equipment has been tested and found to comply with the limits for a Class A digital device pursuant to Part 15 of the FCC Rules. These limits are designed to provide reasonable protection against harmful interference when the equipment is operated in a commercial environment. This equipment generates, uses, and can radiate radio frequency energy and, if not installed and used in accordance with the instruction manual, may cause harmful interference to radio communications. Operation of this equipment in a residential area is likely to cause harmful interference in which case the users will be required to correct the interference at their own expense.

Cables

To maintain compliance with applicable emission standards, use cables shielded with metallic RFI/EMI connector hoods on this device.

Canada notice

This digital apparatus does not exceed the Class A limits for radio noise emissions from digital apparatus set out in the radio interference regulations of the Canadian Department of Communications.

Avis Canadien

Le présent appareil numérique n'émet pas de bruits radioélectriques dépassant les limites applicables aux appareils numériques de la classe A prescrites dans le Règlement sur le brouillage radioélectrique édicté par le ministère des Communications du Canada.

BZT Hinweis

Hiermit wird bescheinigt, daß dieses Gerät in Übereinstimmung mit den Bestimmungen der BAPT-AmtsblVfg 243/1991 funkentstört ist. Der vorschriftsmäßige Betrieb mancher Geräte (z.B. Meßsender) kann allerdings gewissen Einschränkungen unterliegen. Beachten Sie deshalb die Hinweise in der Bedienungsanleitung.

Dem Bundesamt für Zulassungen in der Telekommunikation wurde das Inverkehrbringen dieses Gerätes angezeigt und die Berechtigung zur Überprüfung der Serie auf die Einhaltung der Bestimmungen eingeräumt.

Safety warnings

Failure to follow the directions contained in the following statements could result in bodily harm or loss of life.

- To reduce the risk of personal injury from hot surfaces, allow the internal components time to cool before touching or installing options.
- To reduce the risk of personal injury or damage to the equipment, ensure that the equipment is properly supported or braced when installing options.
- This equipment is designed for connection to a grounded outlet. The grounding type plug is an important safety feature. To avoid the risk of electrical shock or damage to the equipment, do not disable this feature.
- This equipment is furnished with one or more lithium batteries. There is a danger of explosion and risk of personal injury if the battery is incorrectly replaced or mistreated. Do not attempt to recharge the battery, disassemble it, or dispose of it in a fire.

Table of Contents

Preface vii

Chapter 1 **Cluster Conversion of Filers** 1

Converting filers to a cluster 1

Chapter 2 **Hardware Upgrade Process**. 9

Converting your filers 9

Preparing for the conversion 10

Replacing the miscellaneous interface ribbon cable 12

Installing a cluster interconnect adapter 14

Installing an FC-AL adapter 16

Chapter 3 **Cluster Configuration**. 19

Setting up your cluster 19

Configuring your cluster 20

Cabling a cluster 30

Cabling a minimum cluster configuration 32

Cabling a maximum cluster configuration in an equipment rack 37

Chapter 4 **Filer Configuration in a Cluster** 61

Configuring your clustered filers 61

Making parameters, licenses, and configuration files match 62

Making network interfaces match 64

Testing the conversion 67

Appendix A **Optional Hardware Procedures** 69

Overview of this appendix 69

Adding main memory DIMMs in an F630 70

Adding NVRAM in an F630 74
Moving or replacing an adapter 77

Index 81

Preface

About this guide

This guide describes how to convert existing F630, F740, and F760 filers and Fibre Channel StorageShelves into clusters. This guide does not cover basic system or network administration topics, such as IP addressing, routing, and network topology.

Audience

This guide is for system administrators who are familiar with operating a NetApp® F630, F740, or F760 filers and a Fibre Channel StorageShelf FC7 (9-GB disk drives) or a Fibre Channel StorageShelf FC8 (18-GB disk drives).

Terminology

This guide uses the following terms:

- *Filer* refers to an F630, F740, or F760 filer.
- *Disk shelf* refers to a Fibre Channel StorageShelf FC7 or a Fibre Channel StorageShelf FC8.

Command conventions

You can enter filer commands on the system console or from any client that has access to the filer using `telnet`. In examples of commands run on a UNIX workstation, this guide uses the command syntax and output of SunOS 4.1*x*. If you use a different version of UNIX, the command syntax and output might be different.

Formatting conventions

The following table lists the kinds of formatting this guide uses to identify special information.

Formatting convention	Type of information
Italic type	◆ Words or characters that require special attention. ◆ File names and path names. ◆ Placeholders for information you must supply. For example, if the guide requires you to enter the **`arp -d`** ***`hostname`*** command, you enter the characters “arp -d” followed by the actual name of the host. ◆ Man page names. ◆ Book titles in cross-references.
`Monospaced` font	◆ Command and daemon names. ◆ Information displayed on the system console or other computer monitors. ◆ The contents of files.
`Bold monospaced` font	Words or characters you type. What you type is always shown in lowercase letters, unless you must type it in uppercase letters for it to work properly.

Keyboard conventions

This guide uses capitalization and some abbreviations to refer to the keys on the keyboard. The keys on your keyboard might not be labeled exactly as they are in this guide.

What is in this guide...	What it means...
hyphen (-)	Used to separate individual keys. **For example:** Ctrl-D means holding down the Ctrl key while pressing the D key.
Enter	Used to refer to the key that generates a carriage return, although the key is named Return on some keyboards.
type	Used to mean pressing one or more keys on the keyboard.
enter	Used to mean pressing one or more keys and then pressing the *Enter* key.

Special messages

This guide contains special messages that are described as follows.

Note

A note contains important information that helps you install or operate the system efficiently.

Caution

A caution contains instructions that you must follow to avoid damage to the equipment, a system crash, or loss of data.

WARNING

A warning contains instructions that you must follow to avoid personal injury.

Cluster Conversion of Filers 1

Converting filers to a cluster

What do you need to know about clusters?

Before proceeding with the conversion process, you need to know about the cluster concept. Refer to *Start Here* for a description of the type and sources of information about clusters. For a description about clusters, refer to the *Data ONTAP 5.2 System Administrator's Guide*.

About cluster conversion

This section describes the software, firmware, and hardware requirements that you must meet for a successful convertion to a cluster.

Description	Minimum requirements
Software	◆ Data ONTAP™ 5.2 software or later for F630s ◆ Data ONTAP 5.2.1software or later for F700s
Firmware	Filer firmware ◆ 2.1_a1 for F630s ◆ 2.1_a2 for F700s Disk firmware ◆ FB37 for Fibre Channel StorageShelf FC7 ◆ FD81 for Fibre Channel StorageShelf FC8
Hardware	Upgrades to the F630, F740, or F760 filer pairs and the disk shelves. Refer to Chapter 2 "Hardware Upgrade Process" on page 9, Appendix A "Optional Hardware Procedures" on page 69, and the *Fibre Channel StorageShelf Hardware Guide* for more information.

Note

Before proceeding with the conversion process, use the "Checklist" on page 5 to make sure that you have gathered everything that you need.

Overview of the conversion process

The following table lists the order of the procedures you must follow for a successful cluster conversion.

Caution

You must follow the order of the procedures listed below. If you fail to follow the specific order described, you can cause permanent damage to your file systems.

Stage	Process	Purpose
1	Enter **`sysconfig -r`** at the consoles of each filer.	Use the resulting output with the "Checklist" on page 5 to determine the hardware configuration of your filers.
2	Enter **`sysconfig -v`** at the consoles of each filer.	Verify the filer and disk firmware versions.
3	Enter **`ifconfig -a`** at the consoles of each filer.	Determine the IP addresses of each filer.
4	Back up all your data.	This is an advisable precaution in any conversion process.
5	Verify that both filers have network connections.	The software is on a CD-ROM. You need access to a UNIX or PC system to download the software to the filers.
6	Update each filer to Data ONTAP 5.2.1 software. Refer to the *Software and Firmware Upgrade Guide* for more information.	
7	At the consoles of each filer, enter **`halt`** to shut them down.	You need to do this to upgrade the filer firmware.
8	Update the firmware on your filer. The F630 requires 2.1_a1 and the F700 filers require 2.1_a2. Refer to the *Software and Firmware Upgrade Guide* for more information.	
9	Reboot the filers and verify the software and filer firmware upgrades.	You need to verify software and firmware upgrades before proceeding to Stage 11.

Stage	Process	Purpose
10	Verify that the disk firmware fulfils the minimum requirements for a cluster. If not, update the disk firmware by entering **`disk_fw_update`** from the console of the filer that owns the disk shelf. Then, shut down each filer by entering **`halt`** at the consoles of each filer. **Note** The `disk_fw_update` command only upgrades the firmware on disks. It does not affect the contents of the disks.	You need to verify firmware upgrades before proceeding to converting the hardware configuration of the filers.
11	Update the hardware on the filers and disk shelves. ◆ You need to add the following adapters to each of your filers: ❖ one or up to three FC-AL adapters **Note** If you have a differential wide SCSI adapter in expansion slot 6 of an F630, you must move it to expansion slot 2 or 4 if you are adding three FC-AL adapters. ❖ one cluster interconnect adapter **Note** Before adding the cluster interconnect adapter, you must change a cable connecting the system backplane to the daughter card ◆ You might need to add additional NVRAM SIMMs or main memory DIMMs ◆ You need to add a second LRC card to each disk shelf. Refer to the *Fibre Channel Storage Shelf Hardware Guide* for more information about this procedure. Refer to Chapter 2 “Hardware Upgrade Process” on page 9 for more information about the required procedures.	

Stage	Process	Purpose
	the following table details the slot assignments for adapters in filers that are used in clusters.	

Filer	Slot									
	1	2	3	4	5	6	7	8	9	10
F630	Network Interface Adapter (NIA)				64-bit FC-AL				NVRAM	CI
		SCSI Tape		SCSI Tape						
F740	32-bit FC-AL/ NIA		NIA			GBEthernet		Cluster Interconnect (CI)		
F760	32-bit FC-AL/ NIA	NIA		32-bit FC-AL	GB Ethernet		32-bit FC-AL			

12	If you have multiple FC-AL adapters labeled Channel A, cable them as Channel A loops. Refer to "How to cable the Channel A loops between your filer and disk shelves in a maximum configuration" on page 37.	You need to cable the Channel A loops to perform a `cf status` on each filer.
13	Cable the Channel B loops on the disk shelves but do not complete the loop to the filer. Refer to "How to terminate the Channel B loop in a minimum configuration" on page 32 and "How to cable the Channel B loop between your disk shelves in a maximum configuration" on page 42.	Cabling the Channel B loop cards on the disk shelves is a convenience in the clustering process.
14	Turn the filers on and boot them.	The filers are turned on so that you can perform a `cf status` on each filer.
15	Cable the X ports on the cluster interconnect adapter in each filer and perform a `cf status` on each filer.	You perform a `cf status` on each filer to verify the connection between the X ports.
16	Cable the Y ports on the cluster interconnect adapter in each filer and perform a `cf status` on each filer.	You perform a `cf status` on each filer to verify the connection between the X and Y ports.

Stage	Process	Purpose
17	Enter **`halt`** at the consoles of each filer to shut down the system.	Enter **`halt`** at the consoles of each filer to shut down the system.
18	Complete the Channel B loops by using the filer-to-shelf cables to connect the disk shelves to each partner filer and booting the filers. Refer to "How to connect the filers in a minimum configuration" on page 34 and "How to connect the filers in a maximum configuration" on page 47.	When you boot both filers, you should be able to see the disks 'owned' by the local filer and those 'owned' by its partner.
19	Enter **`boot`** at the consoles of each filer.	
20	You can now license the cluster. Refer to "How to license clusters" on page 59 for more information.	You need to license the cluster to enable takeover.

Checklist

The following checklist provides a list of cluster conversion requirements. If your answer to the second column is No, write your requirements in the third column. Before proceeding with the conversion process, make sure that you have gathered everything that you need.

Requirements	Yes/ No	What do you need?
Do the filers have a network connection?		
Do you have Data ONTAP 5.2.1?		
Do you have Firmware 2.1_a1 for an F630 or 2.1_a2 for an F700?		
Do you have the *Software and Firmware Upgrade Guide*?		
Do you have the recommended amount of main memory?		
◆ at least 256 MB for each filer that has two FC-AL adapters		
◆ at least 512 MB for each filer that has three or four FC-AL adapters		
Do you have 32 MB of NVRAM?		
Does your F630 have an FC-AL adapter in expansion slot 8?		

Requirements	Yes/ No	What do you need?
Do you have a differential wide SCSI adapter for external tape devices in expansion slot 6 of your filers? Refer to “Moving or replacing an adapter” on page 77 for what you need to do.		
Do you have the following hardware components for the conversion? Refer to “Account for and assemble the additional required hardware” on page 10 for exact requirements.		
◆ Main memory DIMMs, if necessary		
◆ NVRAM SIMMs, if necessary		
◆ Cluster interconnect adapters		
◆ Cluster interconnect cables		
◆ Miscellaneous interface ribbon cables		
◆ Additional FC-AL adapters		
◆ Filer-to-shelf cables		
❖ HSSDC–to–DB-9 cables for FC-AL adapters in filers		
❖ DB-9–to–DB-9 cables for onboard FC-AL interface on F700s		
◆ Shelf-to-shelf (DB-9–to–DB-9) cables		
◆ Terminators		
◆ LRC cards		
◆ Fibre Channel StorageShelf FC7 or Fibre Channel StorageShelf FC8 **Note** The total storage capacity supported by a cluster of two filers is 1.5 terabytes (TB).		
Do you have the *Fibre Channel StorageShelf Hardware Guide*?		
Do you have the following equipment and tools?		

Requirements	Yes/ No	What do you need?
◆ #1 and #2 Phillips screwdrivers		
◆ Antistatic wrist strap and grounding strap		
Do you have the following labels that were provided for converting your cluster?		
◆ Solid-colored labels that you use to label cables for all Channel A loops		
◆ Striped labels matching the solid-colored labels that you use to label cables for all Channel B loops		

Hardware Upgrade Process 2

Converting your filers

About this chapter

This chapter describes the hardware upgrades that you need to perform to convert your filers for a cluster.

Optional procedures

For an F630: The following optional procedures might be required for your cluster and are described in Appendix A, "Optional Hardware Procedures."

- "Adding main memory DIMMs in an F630" on page 70
- "Adding NVRAM in an F630" on page 74
- "Moving or replacing an adapter" on page 77

For an F700: If you have a 64-bit FC-AL adapter installed in expansion slot 8, you must remove it. The procedure is described in Appendix A, "Optional Hardware Procedures."

Note

The appendix in the *Fibre Channel StorageShelf Hardware Guide* describes the hardware upgrade that you need to perform to convert your disk shelves for a cluster.

Chapter contents

The following table provides a list of the hardware upgrades that you must perform for a successful conversion

Filers	Task
F630, F740, F760	"Preparing for the conversion" on page 10
F630 only	"Replacing the miscellaneous interface ribbon cable" on page 12
F630, F740, F760	"Installing a cluster interconnect adapter" on page 14
F630, F740, F760	"Installing an FC-AL adapter" on page 16

Preparing for the conversion

Assumptions about existing hardware

The section is based on the assumption that you have two working filers.

Account for and assemble the additional required hardware

The following table lists all the hardware required to set up a cluster (including the existing hardware).

Required hardware	For a minimum configuration...	For a maximum configuration...
Cluster interconnect adapters	2	2
4m cluster interconnect cables	2	2
Miscellaneous interface ribbon cables	2	2
FC-AL adapters	4	8
1m filer-to-shelf (HSSDC–to–DB-9) cables	4	8
Disk shelves: Fibre Channel StorageShelf FC7 only Fibre Channel StorageShelf FC8 only Mix of Fibre Channel StorageShelf FC7 and Fibre Channel StorageShelf FC8 **Caution** Do not place 18-GB disks into 9-GB disk shelves or 9-GB disks into 18-GB disk shelves.	 2 2 2	 up to 24 up to 12 the number of disk shelves for both filers must be no more than 1.5 TB.
LRC cards	4	up to 48

Required hardware	For a minimum configuration...	For a maximum configuration...
0.5m shelf-to-shelf (DB-9–to–DB-9) cables	0	You need (*n* - *l*) number of cables, where *n* is the number of disk shelves and *l* is the number of loops.
terminators	2	4

Replacing the miscellaneous interface ribbon cable

About this process

The current miscellaneous interface ribbon cable connector in an F630 makes it difficult to insert the cluster interconnect adapter in backplane expansion slot 10. The replacement miscellaneous interface ribbon connector corrects this problem.

Caution

When replacing the miscellaneous interface ribbon cable connector, be careful not to dislodge any other connectors.

How to replace the miscellaneous interface ribbon cable

To replace the miscellaneous interface ribbon cable, follow these steps.

Step	Action
1	Unplug the miscellaneous interface ribbon cable connector from the J406 connector on the daughter card, as shown. 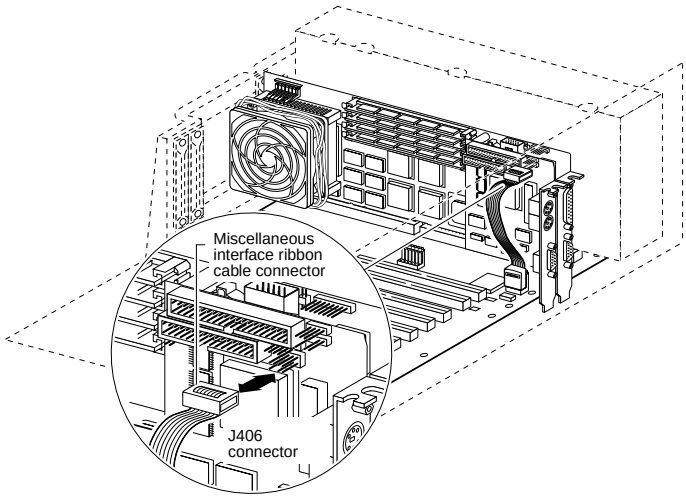

Step	Action
2	Unplug the miscellaneous interface ribbon cable connector from the J39 connector on the system backplane, as shown. 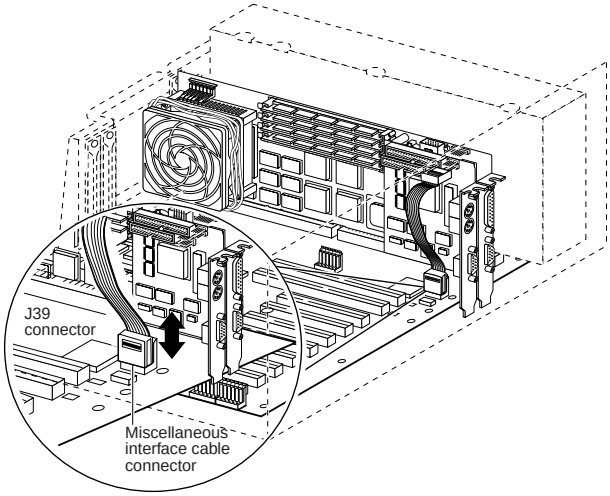
3	Plug the replacement miscellaneous interface ribbon cable connector into the J406 connector on the daughter card, as shown in Step 1.
4	Plug the replacement miscellaneous interface ribbon cable connector into the J39 connector on the system backplane, as shown in Step 2.
5	Verify that all cables in close proximity to the J406 connector are still connected.
6	Proceed with “Installing a cluster interconnect adapter” on page 14.

Installing a cluster interconnect adapter

Purpose of a cluster interconnect adapter

A cluster interconnect adapter provides an interface between two filers through two external ports: the X port and the Y port. When two filers with cluster interconnect interfaces are connected using a cluster interconnect cable, they form a cluster.

Note

The cluster interconnect adapter must be installed in the specified expansion slot for your filer.

How to install a cluster interconnect adapter

To install a cluster interconnect adapter in your filer, follow these steps.

Step	Action
1	**For an F630:** Identify backplane expansion slot 10. **For an F700 series filer :** Identify expansion slot 8 on the motherboard.
2	**For an F630:** Remove the faceplate screw holding the slot cover to the back panel of the backplane carrier and save the screw for installing the cluster interconnect adapter. **For an F700 series filer :** Remove the faceplate screw holding the slot cover to the back panel of the PCB (printed circuit board) carrier and save the screw for installing the cluster interconnect adapter.
3	Hold the adapter by its top edge, with the faceplate near your left hand.

Step	Action
4	Lower the adapter into expansion slot until the faceplate is in position against the back panel and covers the endplate slot on the back panel. 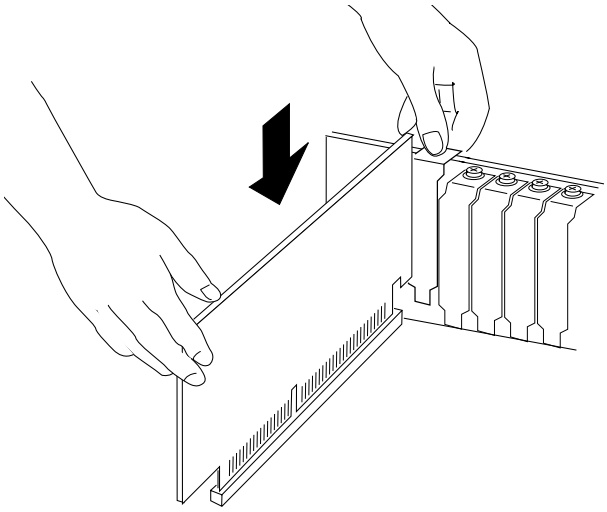
5	Press carefully on the top edge of the adapter until the edge connector is seated in expansion slot.
6	Repeat Steps 1 through 5 for the partner filer.
7	If you have a differential wide SCSI adapter for external tape devices installed in expansion slot 6, proceed with “Moving or replacing an adapter” on page 77. If not, proceed with “Installing an FC-AL adapter” on page 16.

Installing an FC-AL adapter

How to install an FC-AL adapter

To install an FC-AL adapter, follow these steps.

Step	Action
1	**For a minimum configuration:** Identify the expansion slot for your filer: ◆ For an F630 – expansion slot 7 ◆ For an F700 series filer – expansion slot 1 **For a maximum configuration:** Identify the expansion slot for your filer: ◆ For an F630 – expansion slots 7, 6, and 5 ◆ For an F740 – expansion slots 1 and 2 ◆ For an F760 – expansion slots 1, 4, and 7.
2	**For an F630:** Remove the faceplate screws holding the slot cover to the back panel of the backplane carrier and save the screws for installing the FC-AL adapter. **For an F700 series filer :** Remove the faceplate screws holding the slot cover to the back panel of the PCB carrier and save the screws for installing the FC-AL adapter.
3	Hold the adapter by its top edge, with the faceplate near your left hand.
4	**For a minimum configuration:** Lower the adapter into the expansion slot until the faceplate of the adapter is in position against the back panel and covers the endplate slot on the back panel. **For a maximum configuration:** Lower the adapter into the expansion slots until the faceplate of the adapter is in position against the back panel and covers the endplate slot on the back panel. Repeat the process for each adapter that you install.
5	Press carefully on the top edge of the adapter until the edge connector is seated in the expansion slot.

Step	Action
6	**For an F630:** Insert and tighten the faceplate screw to secure the adapter to the back panel of the backplane carrier. **For an F700 series filer :** Insert and tighten the faceplate screw to secure the adapter to the back panel of the PCB carrier.
7	**For an F630:** Push in the backplane carrier and tighten the six thumbscrews on the back panel. **For an F700 series filer :** Push in the PCB carrier and tighten the eight thumbscrews on the back panel.
8	Repeat Steps 1 through 7 for the partner filer.
9	Leave the power turned off on both filers and proceed to Chapter 3, "Cluster Configuration".

Cluster Configuration 3

Setting up your cluster

About this chapter

This chapter explains how to configure and cable your upgraded hardware into a cluster.

Chapter contents

The following is a list of processes that you must perform to successfully configure and cable your cluster:

- "Configuring your cluster" on page 20
- "Cabling a cluster" on page 30
- "Cabling a minimum cluster configuration" on page 32
- "Cabling a maximum cluster configuration in an equipment rack" on page 37

Configuring your cluster

About this section

This section provides you with the cluster configuration possibilities for your filer type.

Cluster configuration possibilities for F630 filers

The following cluster configurations are possible:

- Two FC-AL adapters in each filer, with one labeled Channel A and the other labeled Channel B. The following figure is an example of how you can label a minimum cluster configuration.

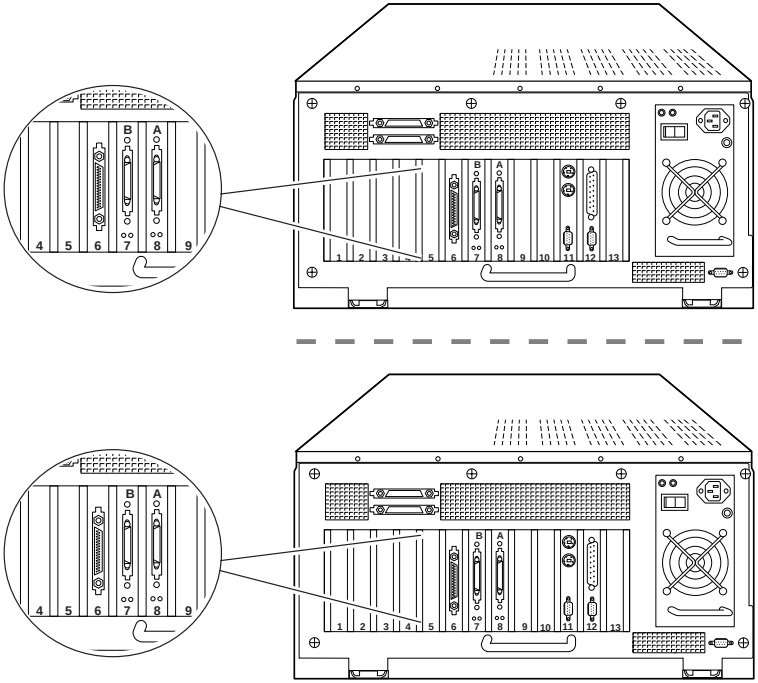

- Three FC-AL adapters in each filer, with two labeled Channel A and one labeled Channel B in one filer, and one labeled Channel A and two labeled Channel B in the partner filer. The following figure is one example of how you can label a maximum cluster configuration.

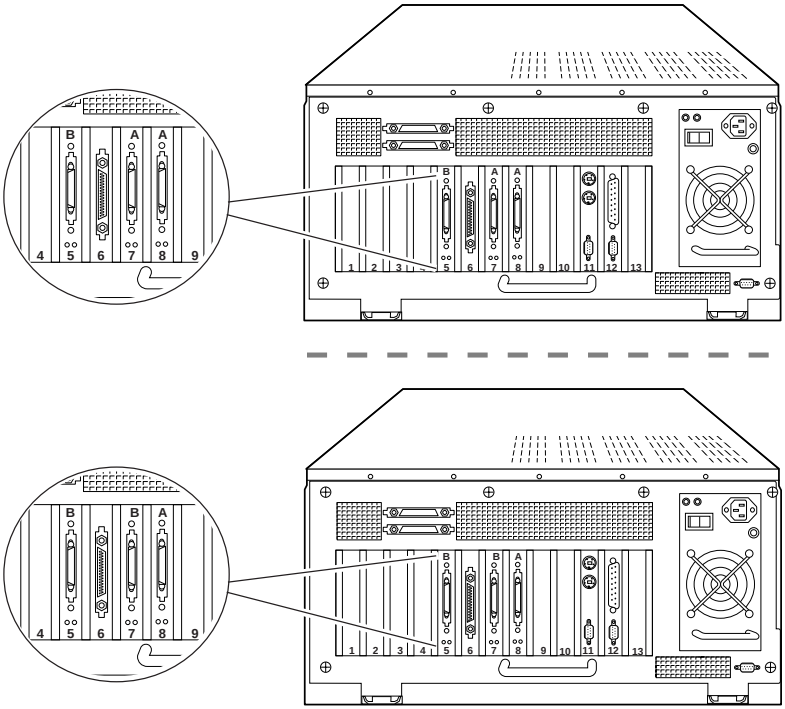

- Four FC-AL adapters in each filer, with two labeled Channel A and two labeled Channel B in each filer. The following figure is another example of how you can label a maximum cluster configuration.

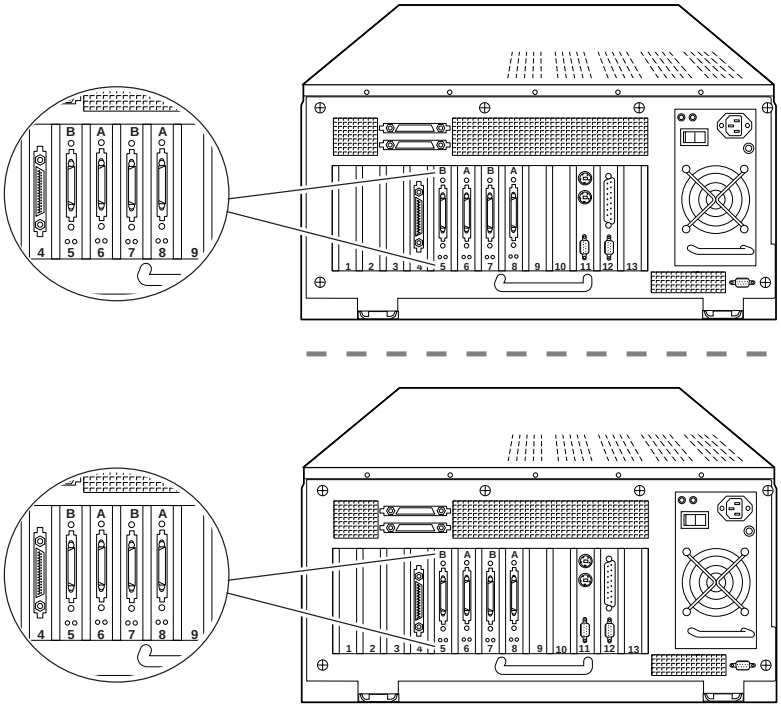

- Four FC-AL adapters in each filer, with three labeled Channel A and one labeled Channel B in one filer, and one labeled Channel A and three labeled Channel B in the partner filer. The following figure is a final example of how you can label a maximum cluster configuration.

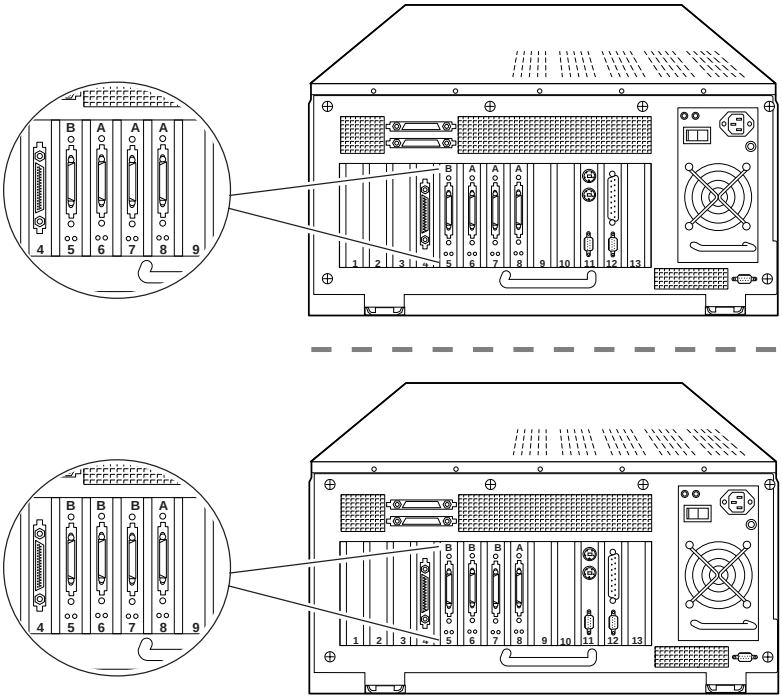

Cluster configuration possibilities for F740 filers

If you are installing your cluster components in racks, the following cluster configurations are possible:

- Two FC-AL interfaces in each filer, with the onboard FC-AL interface labeled Channel A and the FC-AL adapter labeled Channel B in each filer. The following figure is an example of how you can label a minimum cluster configuration.

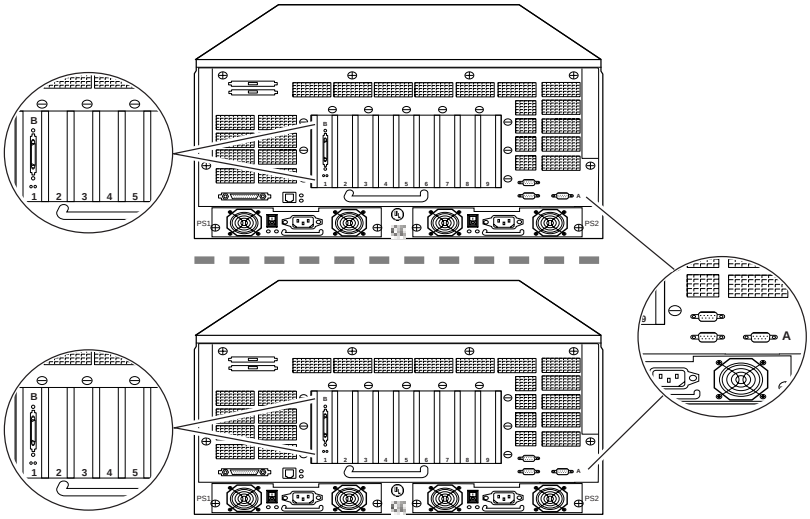

- Three FC-AL interfaces in each filer, with the onboard FC-AL interface and one FC-AL adapter labeled Channel A and one FC-AL adapter labeled Channel B in one filer, and the onboard FC-AL interface labeled Channel A and two FC-AL adapters labeled Channel B in the partner filer. The following figure is one example of how you can label a maximum cluster configuration.

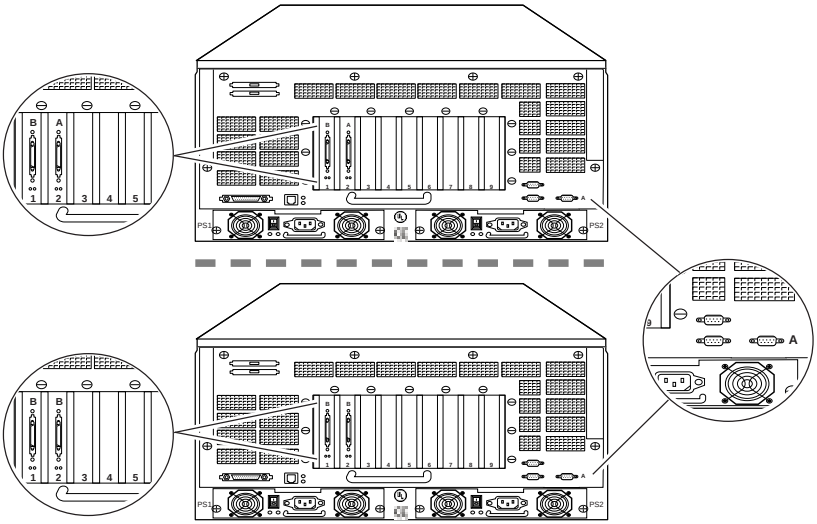

Cluster configuration possibilities for F760 filers

If you are installing your cluster components in racks, the following cluster configurations are possible:

- Two FC-AL interfaces in each filer, with the onboard FC-AL interface labeled Channel A and the FC-AL adapter labeled Channel B in each filer. The following figure is an example of how you can label a minimum cluster configuration.

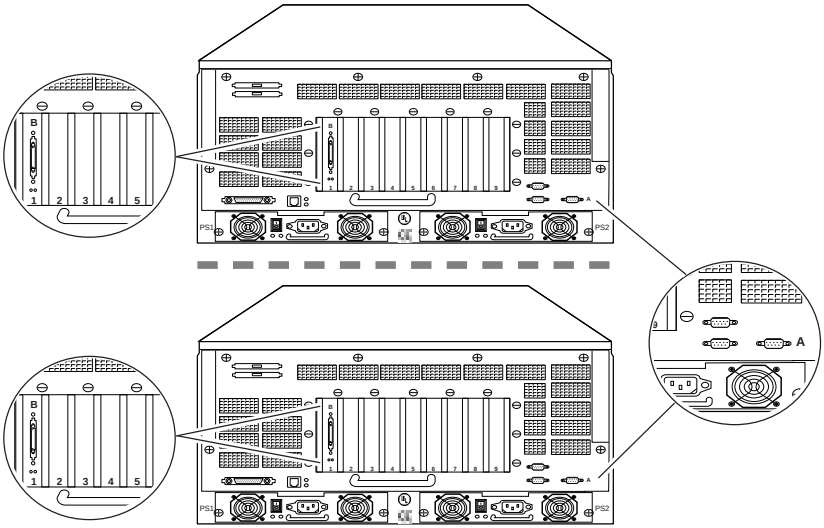

- Three FC-AL interfaces in each filer, with the onboard FC-AL interface and one FC-AL adapter labeled Channel A and one FC-AL adapter labeled Channel B in one filer, and the onboard FC-AL interface labeled Channel A and two FC-AL adapters labeled Channel B in the partner filer. The following figure is one example of how you can label a maximum cluster configuration.

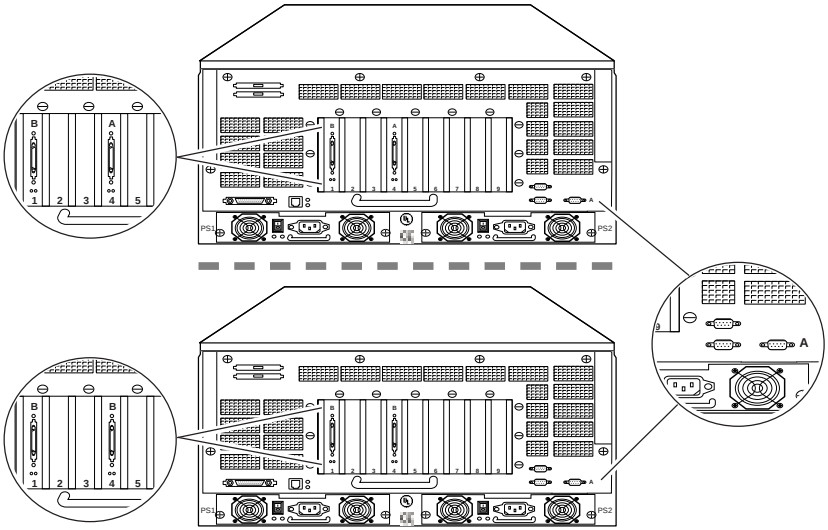

- Four FC-AL interfaces in each filer, with the onboard FC-AL interface and one FC-AL adapter labeled Channel A and two FC-AL adapters labeled Channel B in each filer. The following figure is another example of how you can label a maximum cluster configuration.

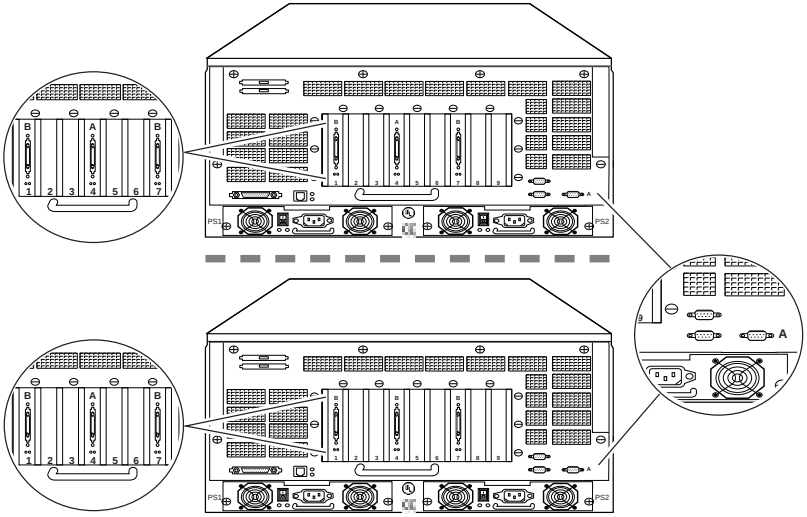

- Four FC-AL interfaces in each filer, with the onboard FC-AL interface and two FC-AL adapters labeled Channel A and one FC-AL adapter labeled Channel B in one filer, and the onboard FC-AL interface labeled Channel A and three FC-AL adapters labeled Channel B in the partner filer. The following figure is a final example of how you can label a maximum cluster configuration.

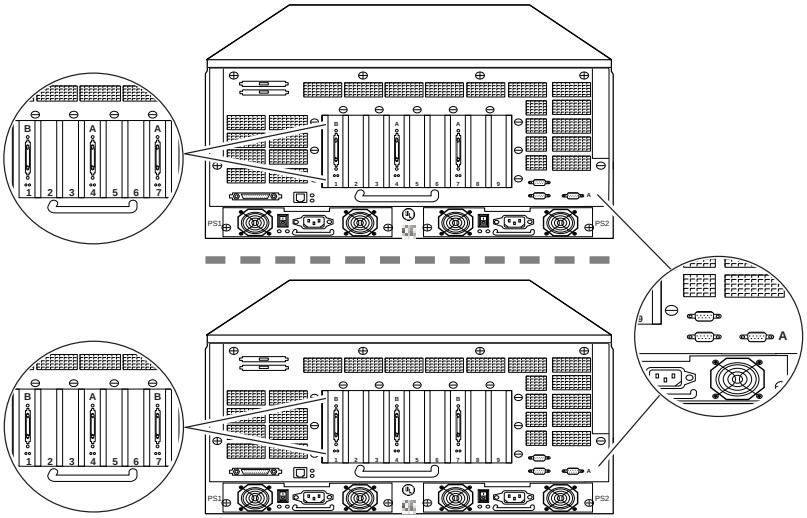

Cabling a cluster

About this section

This section provides you with the procedures required to cable the cluster if you have

- a minimum cluster configuration of one disk shelf per filer
- a maximum cluster configuration

You must cable the cluster in the following order:

- Cable the Channel A connections on your filer and disk shelves
- Cable the Channel B connections on your disk shelves
- Cable the cluster by
  - using the cluster interconnect cable to connect the cluster interconnect adapter in each filer
  - connecting the Channel B connection between disk shelf 0 and the partner filer.

Note

An FC-AL interface can connect to a maximum of eight daisy-chained disk shelves. Both filers in a cluster, each with two or more FC-AL interfaces, can connect to disk shelves with a total storage capacity of up to 1.5 TB. The distribution of the 1.5 TB storage capacity for a filer with two or more FC-AL interfaces is left to your discretion.

Assumptions made in this section

The following assumptions are made in this section:

- That you have installed your filers and disk shelves in an equipment rack based on the procedures provided in the hardware guides for your filer and disk shelves.

  Note

  If you mix Fibre Channel StorageShelf FC8s (which contain only 18-GB fibre channel disks) with Fibre Channel StorageShelf FC7s (which contain only 9-GB fibre channel disks) in a loop of daisy-chained disk shelves, the Fibre Channel StorageShelf FC7 (9GB) must be disk shelf 0. Disk shelf 0 is the disk shelf that is directly connected to the filer.

- That you have labeled the FC-AL interfaces as described in “Configuring your cluster” on page 20.

- That you have labeled the LRC card above the EDM card in each disk shelf as Channel A, if this identification is not etched on the disk shelf fans.

  Note

  Associate a solid-colored label for each Channel A interface. You apply labels of this color on every cable in the loop connected to this interface.

- That you have labeled the LRC card below the EDM card in each disk shelf as Channel B, if this identification is not etched on the disk shelf fans.

  Note

  Identify the color of the label that you applied in the middle of each shelf-to-shelf cable for the Channel A loop. For the Channel B loop, choose the striped label matching the solid-colored label. For example, if you applied a red label for the Channel A loop, use the red striped label for the Channel B loop.

Cabling a minimum cluster configuration

What about the existing fibre channel loop?

The existing fibre channel loop on your filers is the Channel A loop in a minimum cluster configuration.

For an F630 filer: The cabling for the minimum configuration should be as shown in the following figure.

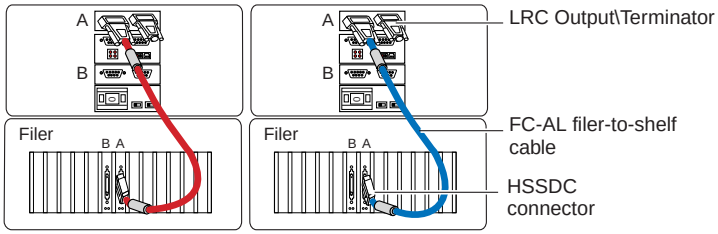

For an F740 and an F760 filer: The cabling for the minimum configuration should be as shown in the following figure.

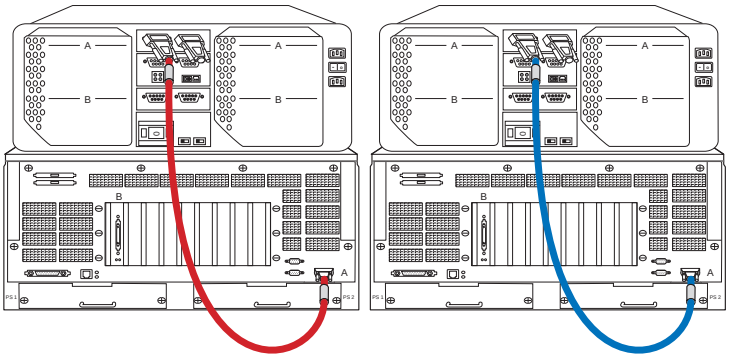

In a maximum configuration, this is one of the Channel A loops in your cluster.

How to terminate the Channel B loop in a minimum configuration

To terminate the Channel B connections of the disk shelves in your minimum cluster configuration, follow these steps.

Step	Action
1	Place a terminator on the LRC Output/Terminator connector of the Channel B LRC card. **Caution** Do NOT complete the Channel B loop to the partner filer. If you complete the Channel B loop to the partner filer and reboot, the filers try to take ownership of both sets of disks and cause permanent damage to your file systems.
2	Repeat Step 2 for the partner filer. (The Channel A cabling that you did previously is also shown.)
	For an F630 filer: The result is as shown in the following figure. 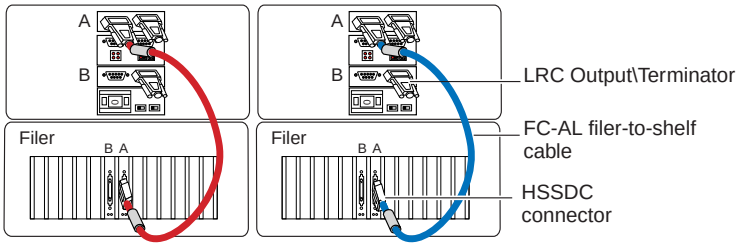
	For an F740 and an F760 filer: The result is as shown in the following figure. 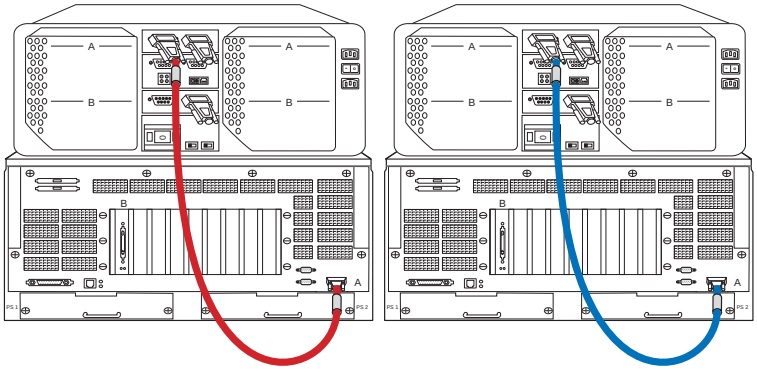
3	Proceed to “How to connect the filers in a minimum configuration” on page 34.

How to connect the filers in a minimum configuration

To connect the filers, follow these steps.

Step	Action

1	Run a `cf status` command on each filer. The resulting output should be as follows:
	
	`cluster monitor not initialized.`
	`Interconnect is down.`

2	Using the 4m cluster interconnect cable, connect the X port of the cluster interconnect adapter on one filer to the X port on the partner filer. Perform a `cf status` on each filer. The resulting output should be as follows:
	
	`cluster monitor not initialized.`
	`Y link is down.`
	
	Note
	The cluster interconnect adapter has two ports; the X port is above the Y port.
	
	Caution
	Verify that you connected the cable to the Y port. Connecting to the wrong port disables the takeover feature.

3	Using the 4m cluster interconnect cable, connect the Y port of the cluster interconnect adapter on one filer to the Y port on the partner filer. Perform a `cf status` on each filer. The resulting output should be as follows: `cluster monitor not initialized.` **Note** The cluster interconnect adapter has two ports; the Y port is below the X port. **Caution** Verify that you connected the cable to the Y port. Connecting to the wrong port disables the takeover feature.
4	At the consoles of each filer, enter **`halt`** to shut down the system.

Step	Action
5	Connect the filer to the Channel B LRC card on disk shelf 0 of the partner filer by ◆ Connecting the HSSDC end of the FC-AL filer-to-shelf cable to the FC-AL adapter labeled Channel B on the filer ◆ Connecting the DB-9 end of the FC-AL filer-to-shelf cable to the Input connector of the LRC card labeled Channel B on disk shelf 0 of the partner filer **Note** Apply a label on each end of the filer-to-shelf cable.
6	Repeat Step 5 for the partner filer. **Note** These figures only show how to complete the Channel B loop to the partner filer; they do not show the cabling between the cluster interconnect adapters in both filers. The cabling between the cluster interconnect adapters is not shown in these figures to reduce the possible confusion resulting from the number of cables involved.
	For an F630 filer: The following figure illustrates the completed cabling for the Channel B loops in a minimum configuration. 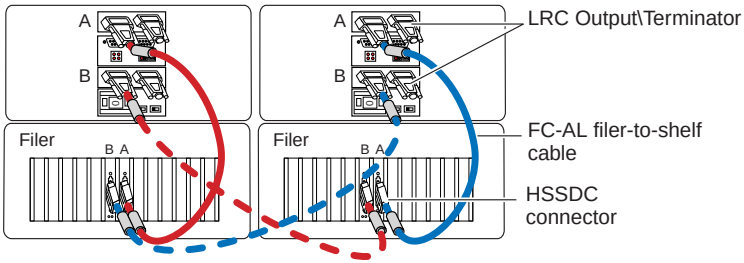

Step	Action
7	**For an F740 and an F760 filer:** The following figure illustrates the completed cabling for the Channel B loops in a minimum configuration. 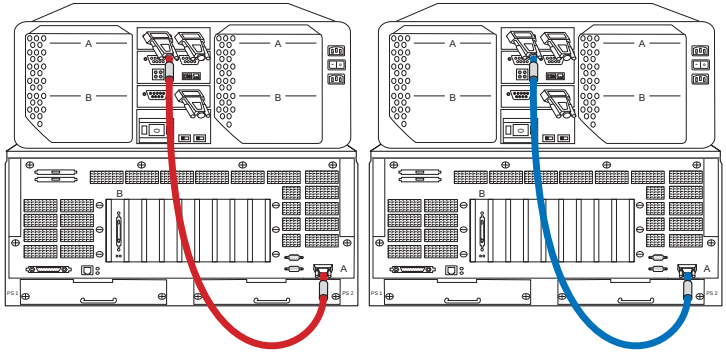
8	At the console of each filer, enter **`boot`** to run the filers.

Cabling a maximum cluster configuration in an equipment rack

How to cable the Channel A loops between your filer and disk shelves in a maximum configuration

To cable the Channel A connections of your cluster, follow these steps.

Step	Action
1	**For an F630 filer:** Connect the filer to disk shelf 0 by ◆ Connecting the HSSDC connector on the FC-AL filer-to-shelf cable to one of the FC-AL adapters labeled Channel A on the filer ◆ Connecting the other DB-9 connector on the FC-AL filer-to-shelf cable to the Input connector of the LRC card labeled Channel A on disk shelf 0 **Note** Apply a label of the selected color on each end of the cable.
	For an F740 and an F760 filer: Connect the filer to disk shelf 0 by ◆ Connecting a DB-9 connector on the FC-AL filer-to-shelf cable to the onboard FC-AL interface on the filer ◆ Connecting the other DB-9 connector on the FC-AL filer-to-shelf cable to the Input connector of the LRC card labeled Channel A on disk shelf 0 **Note** Apply a label of the selected color on each end of the cable.
2	Connect disk shelf 0 to disk shelf 1 by ◆ Connecting the DB-9 connector of the FC-AL shelf-to-shelf cable to the Output/Terminator connector of the LRC card labeled Channel A on disk shelf 0 ◆ Connecting the other DB-9 connector of the FC-AL shelf-to-shelf cable to the Input connector of the LRC card labeled Channel A on disk shelf 1 **Note** Apply a label in the middle of the cable.

Step	Action
3	Repeat Step 2 by connecting disk shelf 1 to disk shelf 2, and so on, for the number of disk shelves that you have in this loop.
4	Terminate the daisy-chain by putting a terminator on the LRC card Output/Terminator connector on the last disk shelf.
5	**For an F630 filer:** Repeat Steps 1 through 4 for all FC-AL adapters labeled Channel A on the filer.
	For an F740 and an F760 filer: For all remaining FC-AL adapters labeled Channel A on the filer, connect the filer to disk shelf 0 by ◆ Connecting the HSSDC connector on the FC-AL filer-to-shelf cable to the FC-AL adapter labeled Channel A on the filer ◆ Connecting the other DB-9 connector on the FC-AL filer-to-shelf cable to the Input connector of the LRC card labeled Channel A on disk shelf 0 **Note** Apply a label of the selected color on each end of the cable. Continue by repeating Steps 2 through 4.
6	Repeat Steps 1 through 5 for the partner filer.

Step	Action
	For an F630 filer: The cabling for one possible example of a maximum configuration appears as shown in the following figure.

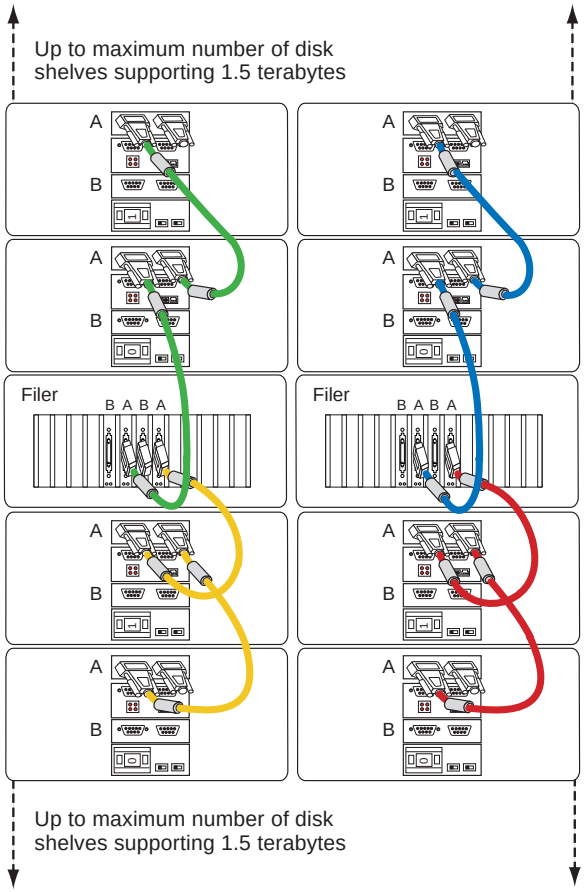

Step	Action
	For an F740 filer: The cabling for one possible example of a maximum configuration appears as shown in the following figure. 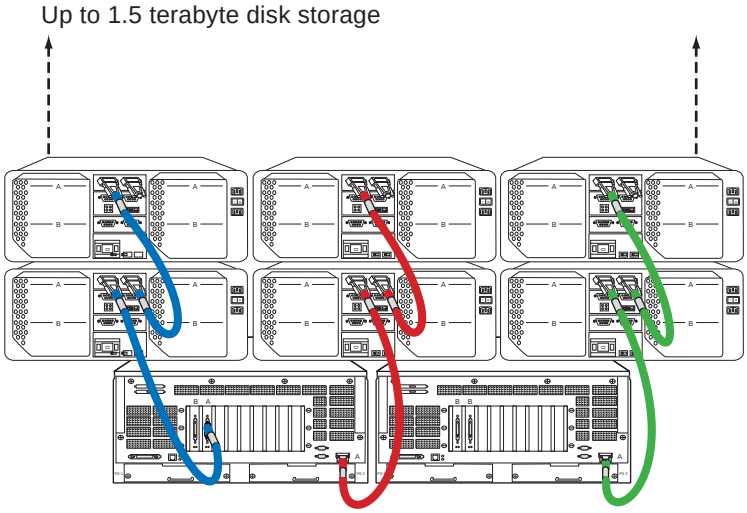

Step	Action
	For an F760 filer: The cabling for one possible example of a maximum configuration appears as shown in the following figure. 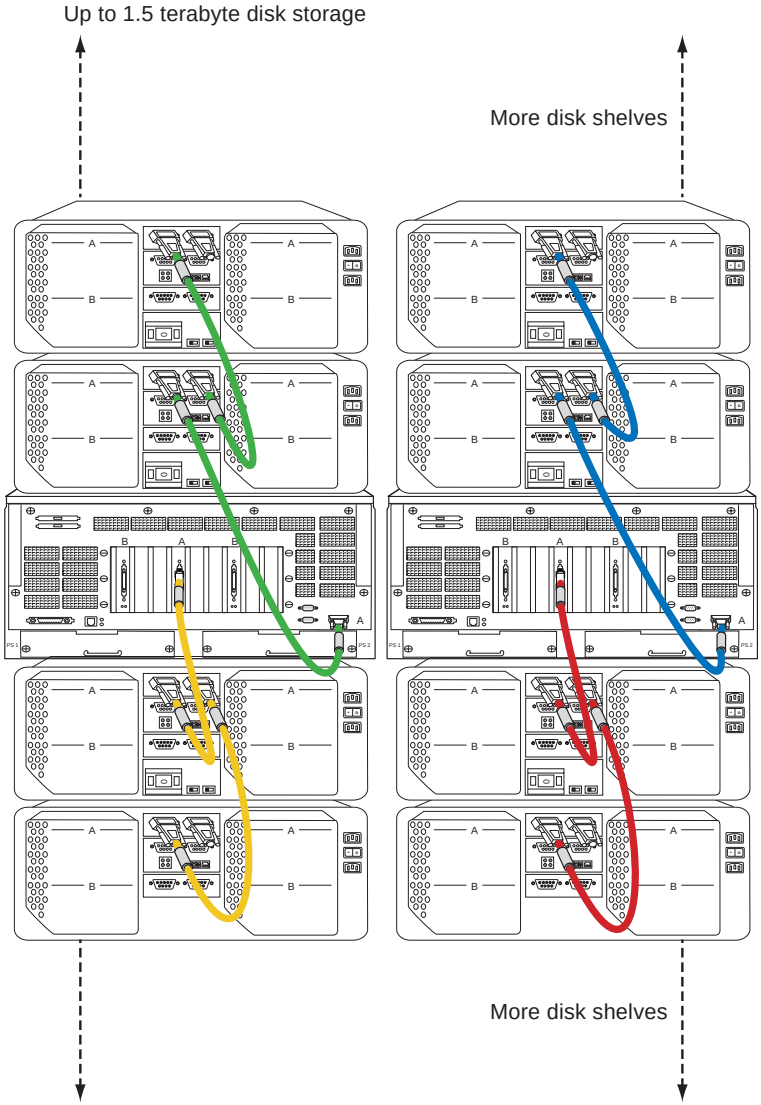
7	Proceed to "How to cable the Channel B loop between your disk shelves in a maximum configuration" on page 42.

How to cable the Channel B loop between your disk shelves in a maximum configuration

To cable the Channel B connections of the disk shelves in your cluster, follow these steps.

Step	Action
1	Connect disk shelf 0 to disk shelf 1 by ◆ Connecting the DB-9 connector of the FC-AL shelf-to-shelf cable to the Output/Terminator connector of the LRC card labeled Channel B on disk shelf 0 ◆ Connecting the other DB-9 connector of the FC-AL shelf-to-shelf cable to the Input connector of the LRC card labeled Channel B on disk shelf 1 **Caution** Do NOT complete the Channel B loop to the partner filer. If you complete the Channel B loop to the partner filer and reboot, the filers try to take ownership of both sets of disks and cause permanent damage to your file systems.
2	Repeat Step 1 by connecting disk shelf 1 to disk shelf 2, and so on, for the number of disk shelves that you have in this loop.
3	Terminate the daisy-chain by putting a terminator on the LRC Output/Terminator connector on the last disk shelf.
4	Repeat Steps 1 through 3 for all FC-AL adapters labeled Channel B on the filer.
5	Repeat Steps 1 through 5 for the partner filer.

Step	Action
	For an F630 filer: The cabling for one possible example of a maximum configuration appears as shown in the following figure. (The Channel A cabling you did previously is also shown.) 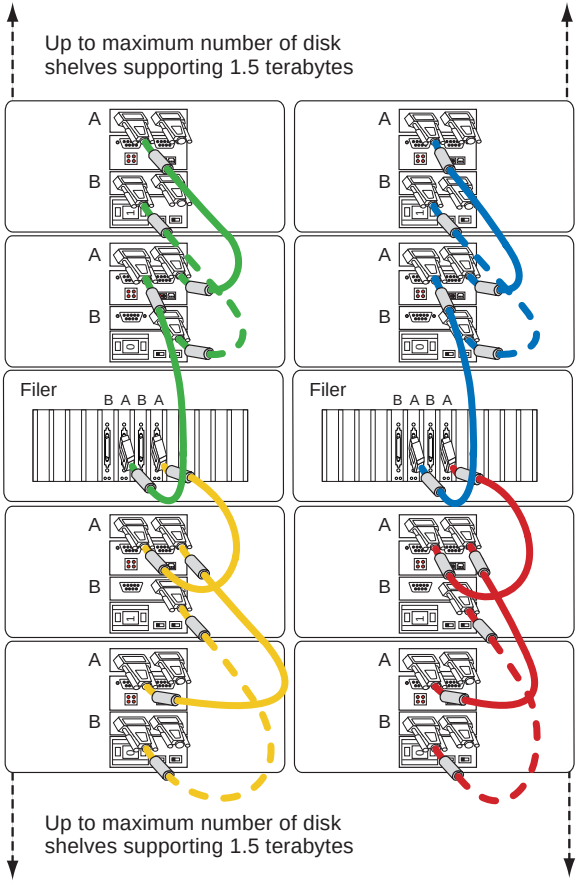

Step	Action
	For an F740 filer: The cabling for one possible example of a maximum configuration appears as shown in the following figure. (The Channel A cabling you did previously is also shown.) 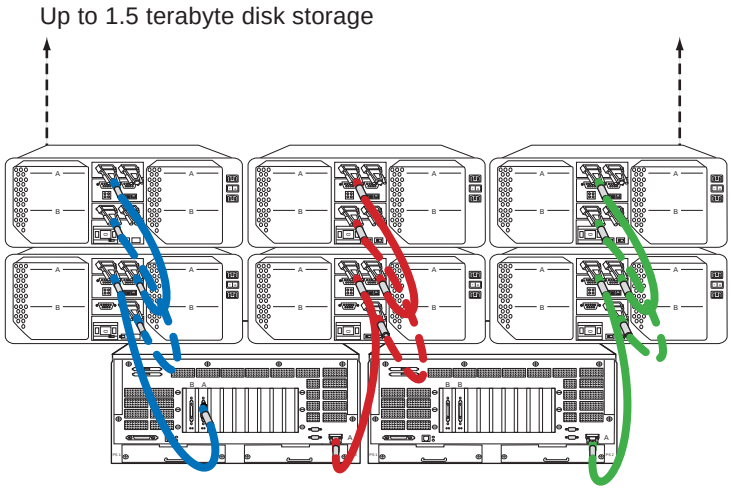

Step	Action
	For an F760 filer: The cabling for one possible example of a maximum configuration appears as shown in the following figure. (The Channel A cabling you did previously is also shown.)

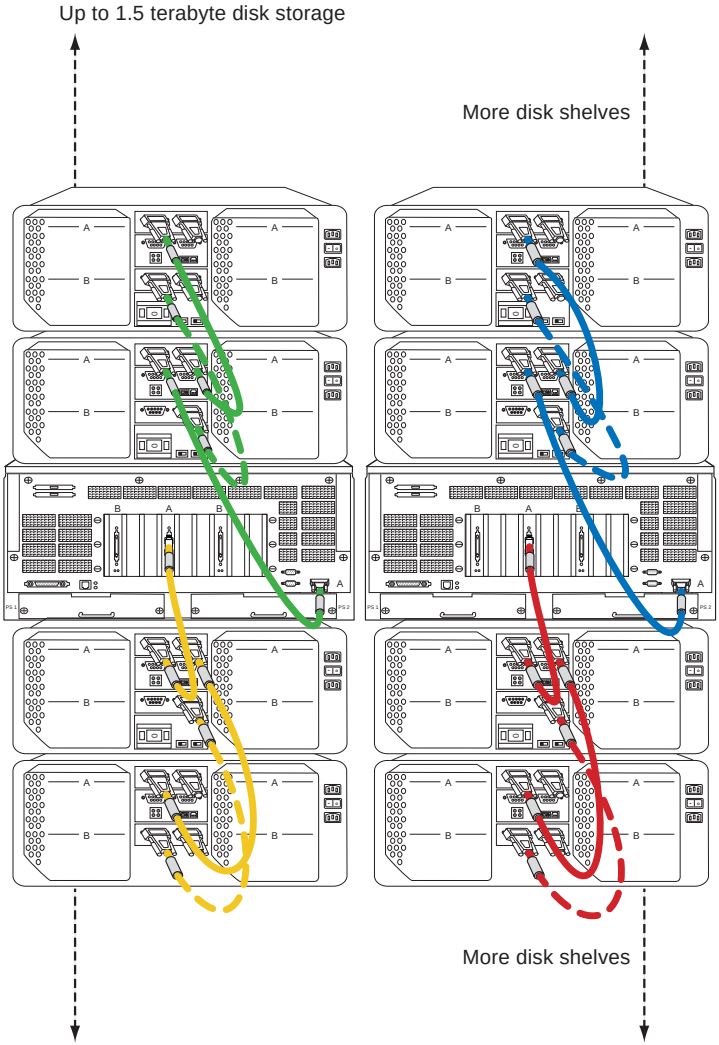

Step	Action

6	Turn on the filers and the disk shelves. Among the system messages are the following:
	
	`Loop on adapter 7 is open.`
	`If adapter is in use, check cabling and seating of LRC cards in FC shelves.`
	`isp2100_init: Initialization failed on FC adapter in slot 7.`
	
	`Only 1 Fibre Channel adapter was detected with attached disks, but there are 2 Fibre Channel adapters on the system. Check the cables and the connections for the adapters and disks.`
	
	`No disks were detected on Fibre Channel port B; this node will be unable to takeover correctly.`
	
	Note
	These messages occur because the Channel B loop has not been completed.

7	Proceed to "How to connect the filers in a maximum configuration" on page 47."

How to connect the filers in a maximum configuration

To connect the filers, follow these steps.

Step	Action

1	Run a `cf status` command on each filer. The resulting output should be as follows:
	
	`cluster monitor not initialized.`
	`Interconnect is down.`

2	Using the 4m cluster interconnect cable, connect the X port of the cluster interconnect adapter on one filer to the X port on the partner filer. Perform a `cf status` on each filer. The resulting output should be as follows:
	
	`cluster monitor not initialized.`
	`Y link is down.`
	
	Note
	The cluster interconnect adapter has two ports; the X port is above the Y port.
	
	Caution
	Verify that you connected the cable to the Y port. Connecting to the wrong port disables the takeover feature.

3	Using the 4m cluster interconnect cable, connect the Y port of the cluster interconnect adapter on one filer to the Y port on the partner filer. Perform a `cf status` on each filer. The resulting output should be as follows: `cluster monitor not initialized.` **Note** The cluster interconnect adapter has two ports; the Y port is below the X port. **Caution** Verify that you connected the cable to the Y port. Connecting to the wrong port disables the takeover feature.
4	At the consoles of each filer, enter **`halt`** to shut down the system.

Step	Action
5	Connect the filer to the Channel B LRC card on disk shelf 0 of the partner filer by ◆ Connecting the HSSDC end of the FC-AL filer-to-shelf cable to one of the FC-AL adapters labeled Channel B on the filer ◆ Connecting the DB-9 end of the FC-AL filer-to-shelf cable to the Input connector of the LRC card labeled Channel B on disk shelf 0 of the partner filer **Note** Identify the striped label that you applied in the middle of each shelf-to-shelf cable for the Channel B loop. Apply a label on each end of the filer-to-shelf cable. Repeat this step for the partner filer. The section "How to cable the Channel B loop between the filer and disk shelf 0 in a maximum configuration" on the next page illustrates how to complete the Channel B loops to the partner filer.
6	At the console of each filer, enter **`boot`** to run the filers.

How to cable the Channel B loop between the filer and disk shelf 0 in a maximum configuration

The following series of figures illustrates how to complete the Channel B loops to the partner filer for one possible example of a maximum configuration. The cabling between the cluster interconnect adapters must be complete.

Note

These figures only show how to complete the Channel B loop to the partner filer; they do not show the cabling between the cluster interconnect adapters in both filers. The cabling between the cluster interconnect adapters is not shown in these figures to reduce the possible confusion resulting from the number of cables involved.

For an F630 filer: This configuration has four FC-AL adapters in each filer, with two FC-AL adapters on each filer labeled Channel A and two FC-AL adapters on each filer labeled Channel B.

The dashed red line in this figure between the disk shelf on the lower right and the filer on the left illustrates the first completed Channel B loop in this cluster.

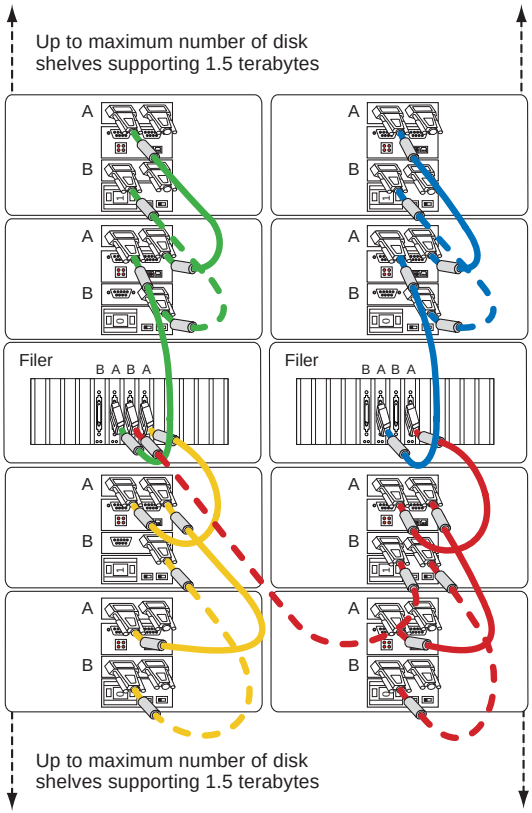

The dashed blue line in this figure between the disk shelf on the upper right and the filer on the left illustrates the second completed Channel B loop in this cluster.

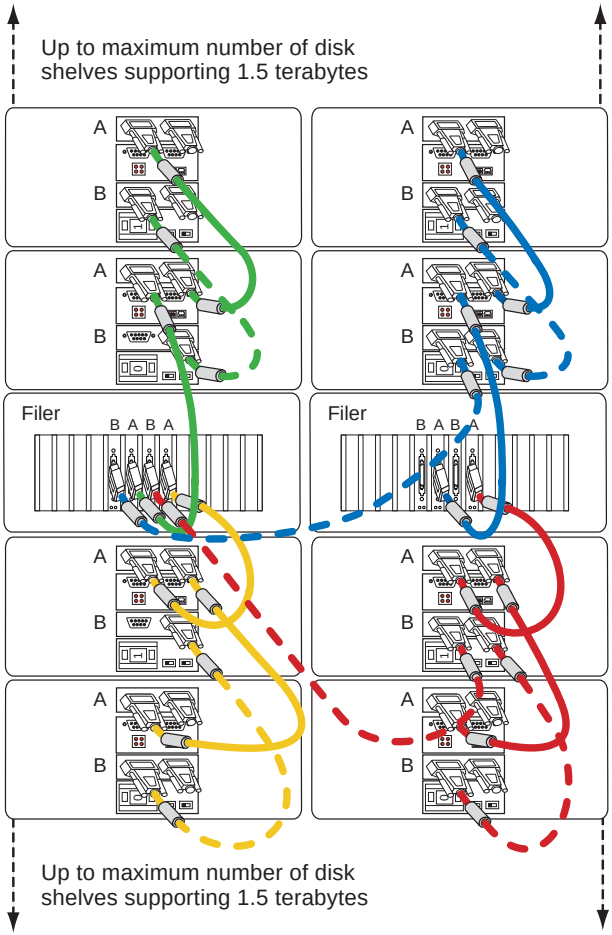

The dashed yellow line in this figure between the disk shelf on the lower left and the filer on the right illustrates the third completed Channel B loop in this cluster.

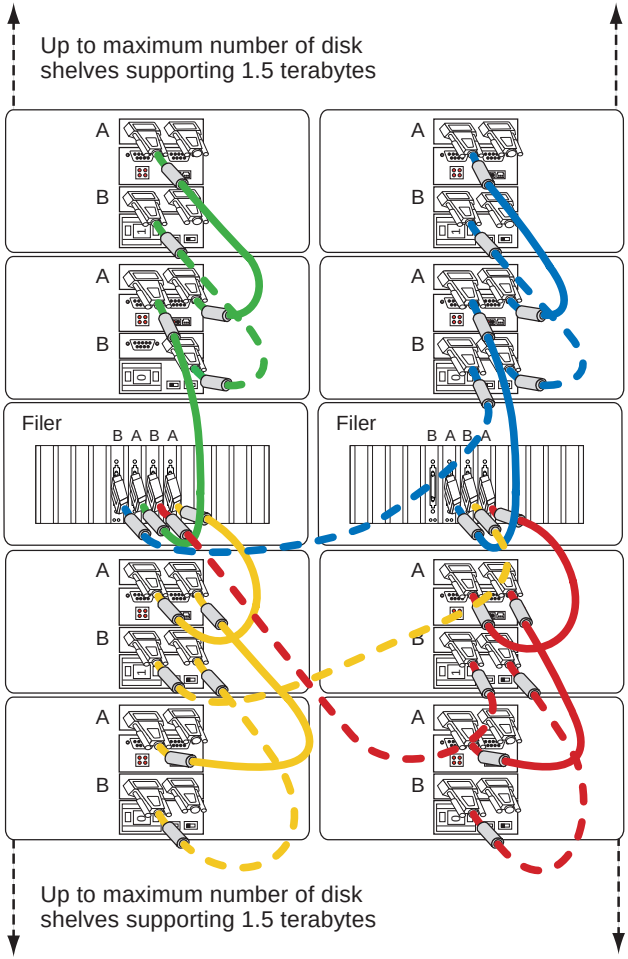

The dashed green line in this figure between the disk shelf on the upper left and the filer on the right illustrates the fourth completed Channel B loop in this cluster.

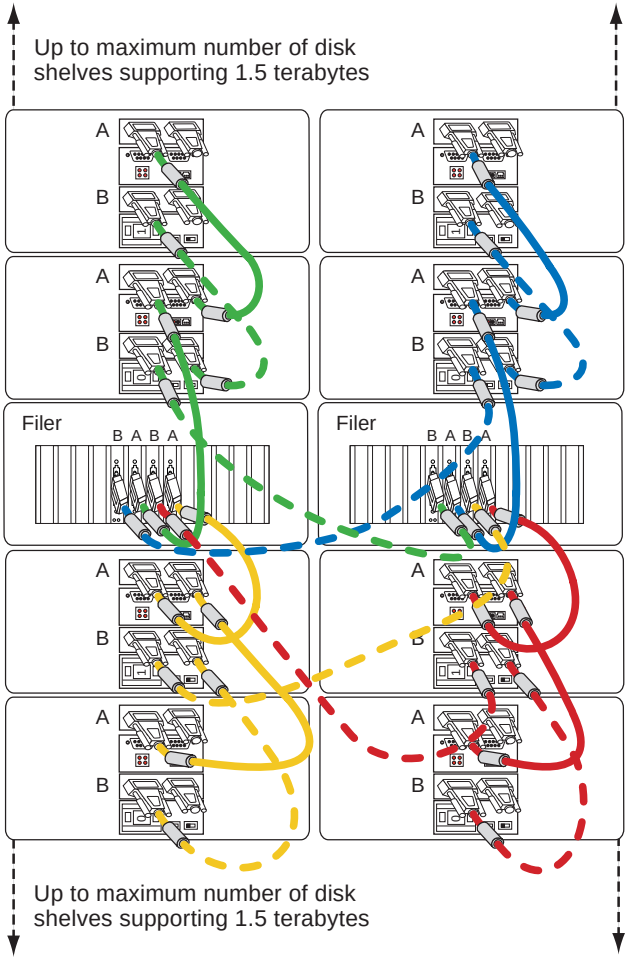

For an 740 filer: This configuration has three FC-AL interfaces in each filer, with two FC-AL interfaces on one filer labeled Channel A and one FC-AL interface on each filer labeled Channel B; and with two FC-AL interfaces on the other filer labeled Channel B and one FC-AL interface on each filer labeled Channel A.

The dashed blue line in this figure between the disk shelf on the left and the filer on the right illustrates the first completed Channel B loop in this cluster.

The dashed red line in this figure between the disk shelf in the middle and the filer on the right illustrates the second completed Channel B loop in this cluster.

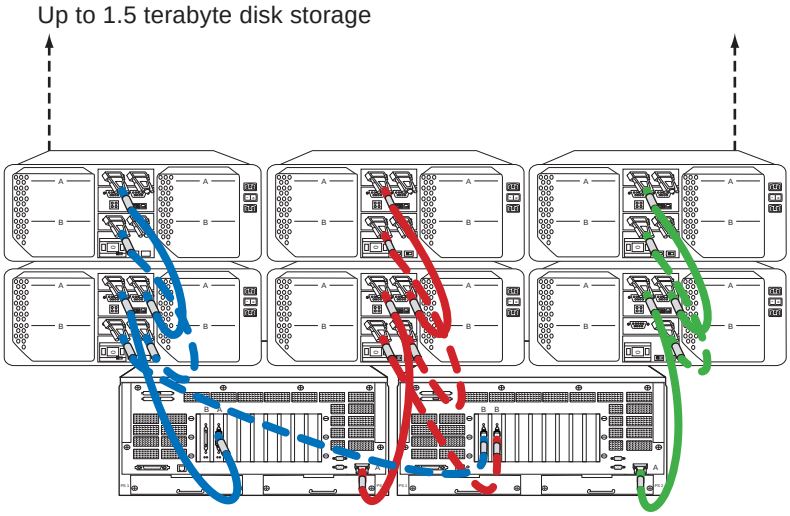

The dashed green line in this figure between the disk shelf on the lower right and the filer on the left illustrates the third completed Channel B loop in this cluster.

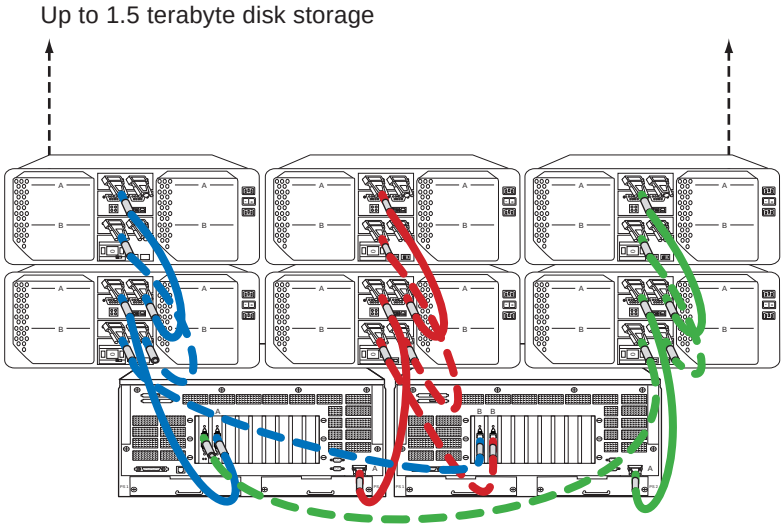

For an F760 filer: This configuration has four FC-AL interfaces in each filer, with two FC-AL interfaces on each filer labeled Channel A and two FC-AL interfaces on each filer labeled Channel B.

The dashed blue line in this figure between the disk shelf on the upper right and the filer on the left illustrates the first completed Channel B loop in this cluster.

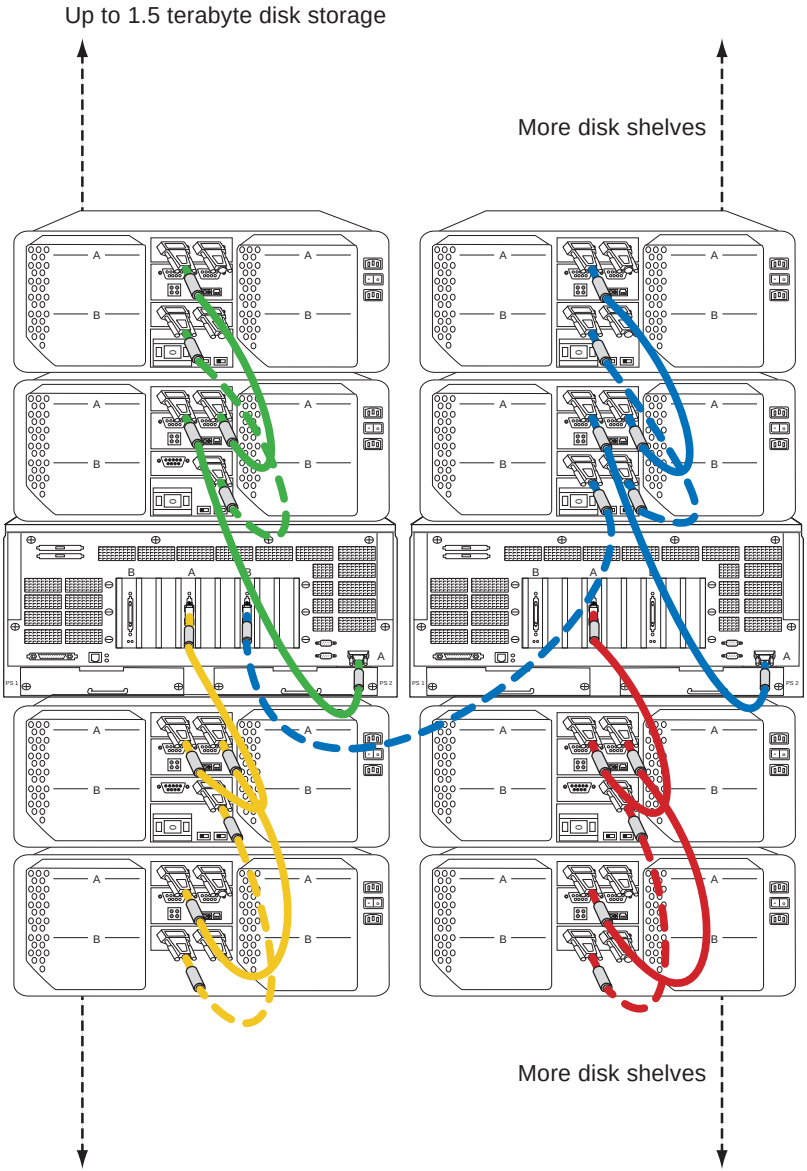

The dashed red line in this figure between the disk shelf on the lower right and the filer on the left illustrates the second completed Channel B loop in this cluster.

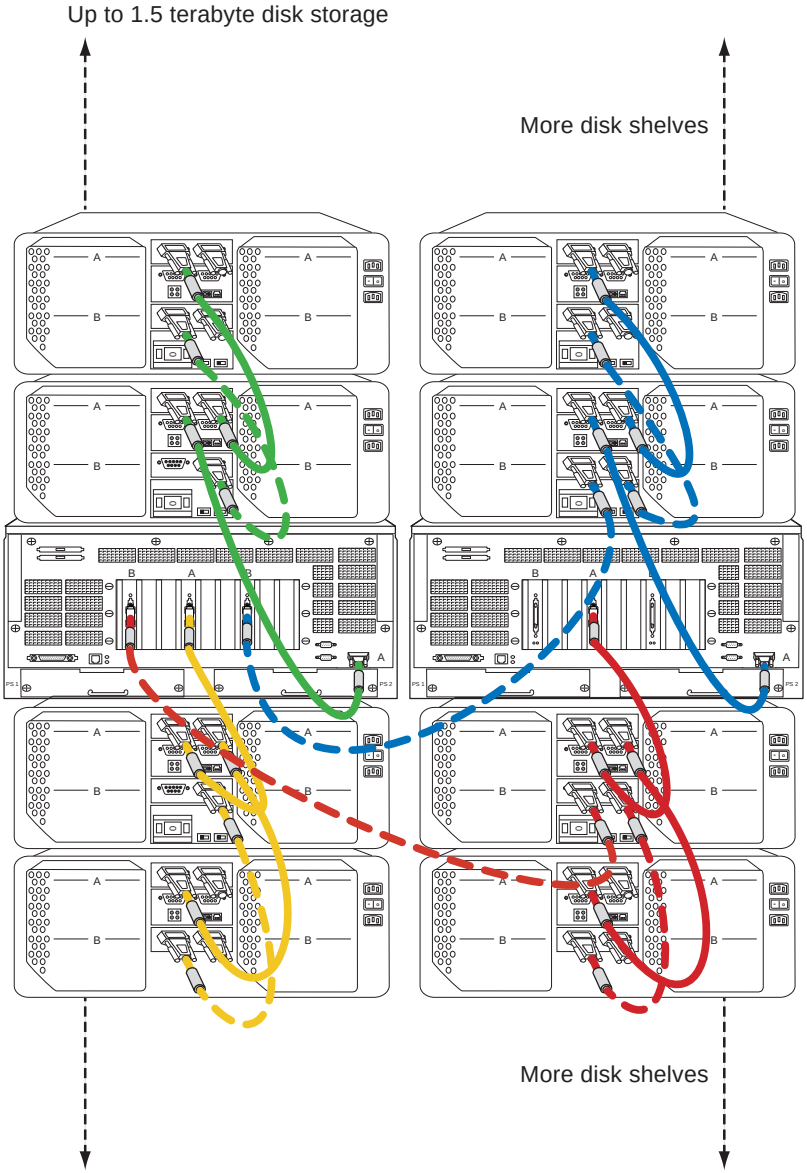

The dashed green line in this figure between the disk shelf on the upper left and the filer on the right illustrates the third completed Channel B loop in this cluster.

The dashed yellow line in this figure between the disk shelf on the lower left and the filer on the right illustrates the fourth completed Channel B loop in this cluster.

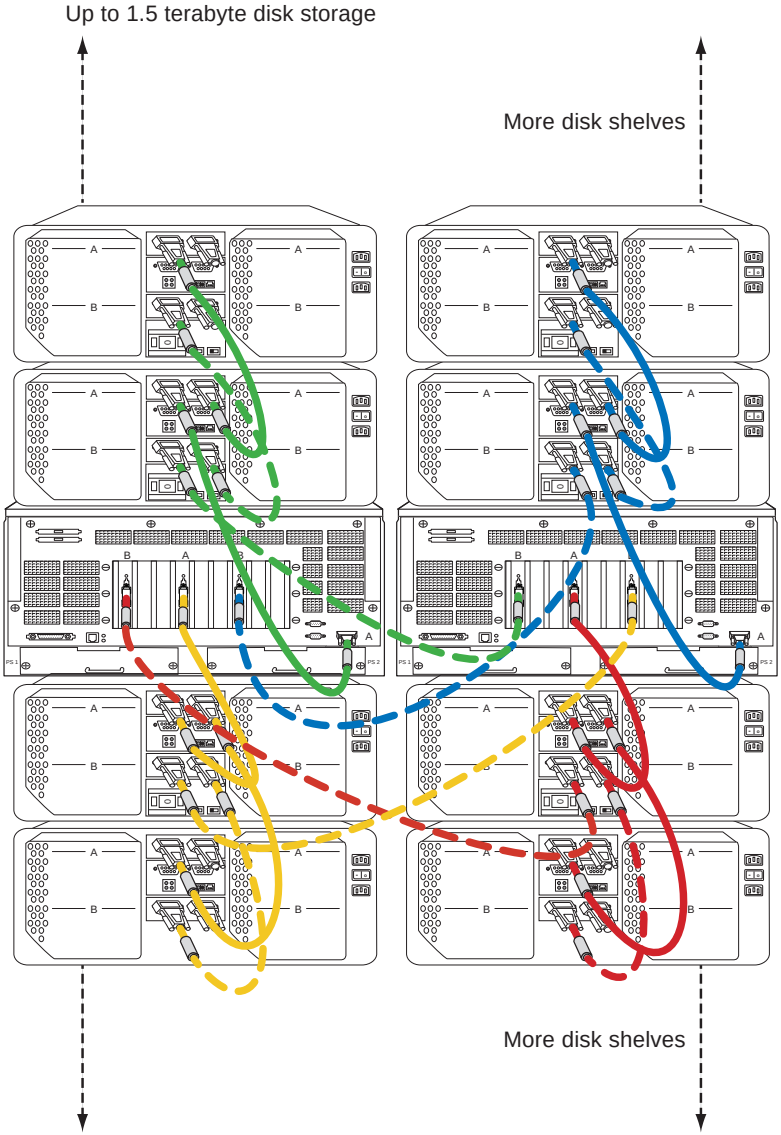

How to license clusters

To license clusters on each filer, follow these steps.

Step	Action
1	At the command-line interface, enter **`license cluster=`*`code`*** where *code* is the license code you received for the cluster feature.
2	Reboot the filer.
3	Repeat Steps 1 and 2 for the partner filer.

Filer Configuration in a Cluster 4

Configuring your clustered filers

About filer configuration in a cluster

You must configure some parameters, configuration files, and network interfaces and all licenses in such a way that when one filer takes over the partner filer, it appears as if it were the partner filer; otherwise, the following consequences can result:

- If some options or configuration files have different values, the values used in takeover are unpredictable.
- If a feature such as CIFS is licensed on one filer but not on the partner filer, after a takeover, CIFS clients cannot access their files on the filer that has taken over from the failed filer.
- If network interface configurations do not match, users of the failed filer see broken network connections.

In general, the more similar the configuration of a filer is to that of its partner, the more it behaves like its partner in a takeover.

Chapter contents

The contents of this chapter are described in the following table.

- "Making parameters, licenses, and configuration files match" on page 62
- "Making network interfaces match" on page 64

Making parameters, licenses, and configuration files match

Parameter matching

The parameters listed in this section for one filer must match those on the other filer in the cluster.

Options that must match: Compare the output of the `options` command for both filers in the cluster and make sure that each option in the following list has the same value in both filers.

```
cifs.show_snapshot
dns.domainname
dns.enable
http.admin.enable
httpd.timeout
httpd.timewait.enable
vol.copy.throttle
ip.path_mtu_discovery.enable
nfs.per_client_stats.enable
nfs.v2.df.2gb.lim
nfs.v3.enable
nis.domainname
nis.enable
pcnfsd.enable
raid.reconstruct_speed
raid.timeout
wafl.maxdirsize
wafl.root_only_chown
```

Other parameters that must match: Make sure that the parameters in the following table match on each filer.

Parameter	Command
date	`date, rdate`
NDMP (on/off)	`ndmpd` {on, off}
NFS enabled	`nfs`
route table published	`route`
routed enabled	`routed` {on,off}
Time zone	`timezone`

License matching

Licenses must match on both filers. For each feature you want, you must purchase a separate license for each filer.

Configuration file matching

The following files must have identical contents:

- */etc/resolv.conf*
- */etc/httpd.mimetypes*
- */etc/nsswitch.conf*

The */etc/rc* file on both filers must either have the same value for the `nfs` command (`on` or `off`), or the command should be absent from the file in both filers.

Making network interfaces match

Matching interfaces

Each filer in a cluster must be configured in such a way that if one filer fails, the other can take over its IP and MAC (media access control) addresses. Each filer must meet the following requirements:

- Each filer must be attached to the same networks and subnetworks as its partner.
- Each local interface must have a local address and a partner address; that is, each must have an address on the partner that the partner can use if it takes over the local filer.

In general, it is a good idea to have pairs of addresses, where local and partner addresses reflect each other. For example, address *n.n.n.n* is the local address for interface x on Filer 1 and the partner address on Filer 2, address *m.m.m.m* is the local address for interface x on Filer 2 and the partner address on Filer 1, and both addresses are on the same subnetwork. This ensures that a filer's partner can provide the same services that the filer can.

Types of interfaces

On a filer in a cluster, interfaces can play three roles, as described in the following table.

Role	Description	Has local IP address?	Has partner IP address?
Dedicated network interface	Connects only the local filer. That is, if the partner filer fails, it is not available to the partner.	Yes	No
Shared network interface	Connects both the local filer and the partner. That is, if the partner fails, the network interface assumes the identity of a network interface on the partner but works on behalf of both the takeover filer and the partner.	Yes	Yes

Role	Description	Has local IP address?	Has partner IP address?
Standby network interface	Connects only the partner. That is, if the partner fails, the network interface works on behalf of the partner. When the filer is not in takeover mode, the network interface is idle.	No	Yes

In addition to assuming the partner IP address in takeover mode, a shared or standby interface assumes the MAC address of the partner. This enables the clients of the partner to continue using their address resolution protocol (ARP) tables after the takeover.

Configuring interfaces

You configure an interface using `setup` as described in the *First-Time Configuration Guide*, or manually using the `ifconfig` command.

Note

The partner netmask is inferred from the partner IP address.

Using setup: During `setup`, the following questions appear for each interface:

```
Please enter IP address for Network Interface ns0 [n.n.n.n]:
Please enter netmask [255.255.0.0]:
Should interface ns0 take over a partner IP address during
failover? [y]:
Please enter the IP address to take over: [m.m.m.m]:
```

Substitute the local address for *n.n.n.n* and the partner address for *m.m.m.m*.

Using ifconfig: How you use the `ifconfig` command depends on whether you are configuring a shared network interface or are configuring a standby interface for takeover:

- To configure a dedicated network interface, put the following command in the filer's */etc/rc* file:

  ```
  ifconfig e0 local_IP_address
  ```

- To configure a shared network interface, put the following command in the filer's */etc/rc* file:

  `ifconfig e0` *`local_IP_address`* `partner` *`partner_IP_address`*

- To configure a separate interface to be used only if the local filer is taken over, put the following command in the filer's */etc/rc* file:

  `ifconfig e0 partner` *`partner_IP_address`*

The *Data ONTAP 5.2 System Administrator's Guide* provides more information on using the `ifconfig` command.

Dual-MAC address cards: The following types of network interface cards that support dual-MAC addresses are supported:

- Single-port 10/100 Base-T Ethernet
- Quad-port 10/100 Base-T Ethernet
- FDDI

The *Data ONTAP 5.2 System Administrator's Guide* provides more information about the types of network interface cards that support dual-MAC addresses.

Testing the conversion

About this section

This section specifies the filer commands you need to enter from your console to test the successful conversion of your filers and disk shelves to a cluster.

How to test the conversion

To test the conversion, follow these steps.

Step	Action	Result
1	From one filer, enter **`ifconfig -a`** and verify the network addresses.	The network connections are verified.
2	For each protocol you have licensed, verify that you can create and retrieve files on both filers.	The protocols are tested on the filer.
3	From the same filer, enter **`cf enable`**.	Takeover of the partner filer is enabled.
4	From the same filer, enter **`cf takeover`**.	The local filer takes over the partner. A successful takeover ends with the following message: `takeover completed`
5	From the same filer, enter **`cf giveback`**.	The partner filer functions normally. A successful giveback ends with the following message: `giveback completed`
6	Repeat Steps 1 through 5 from the other filer.	Takeover has been tested.

Optional Hardware Procedures A

Overview of this appendix

About this appendix

This appendix provides information about optional procedures in the cluster conversion process.

Appendix contents

This appendix discusses the following topics.

- "Adding main memory DIMMs in an F630" on page 70
- "Adding NVRAM in an F630" on page 74
- "Moving or replacing an adapter" on page 77

Adding main memory DIMMs in an F630

When to use this procedure

This is an optional section that provides the procedures for adding or replacing the DRAM DIMMs on the system board of an F630 that has less that 512 MB of main memory. These procedures are not required if your F630 has 512 MB of main memory.

About the F630 main memory configuration

The following figure shows the location of the DRAM DIMM slots.

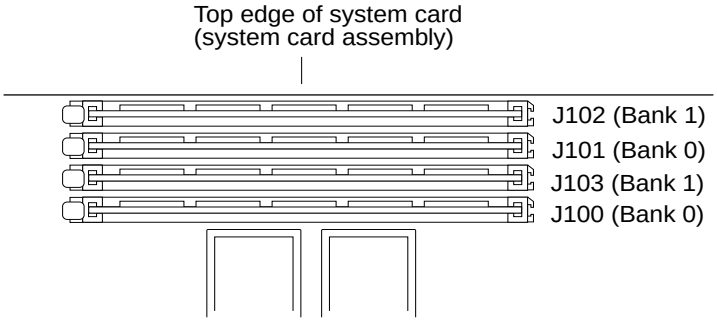

The DRAM DIMMs must meet the following requirements:

- 3.3-volt, 72-bit, fast page mode ECC DIMMs. All DIMMs must be listed on the Network Appliance™ Approved Parts List. Contact Network Appliance Sales to obtain this list. Do not use unapproved DIMMs.
- All DIMMs must have the same number of bytes.

The following figure illustrates a typical DRAM DIMM.

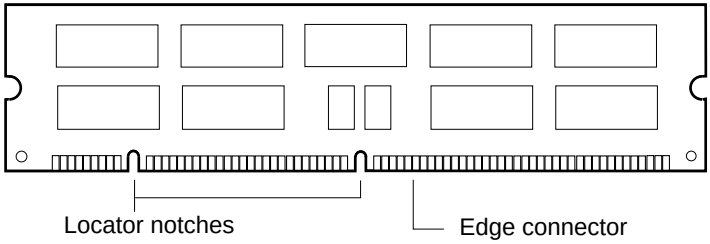

How to configure the system memory

A filer in a cluster requires

- 256 MB of main memory for each filer that has two FC-AL adapters
- 512 MB of main memory for each filer that has three or four FC-AL adapters

Install the DIMMs in pairs (one bank). Install Bank 0 first (J100, then J101); install Bank 1 second (J102, then J103). The only possible DRAM DIMM configuration is listed in the following table.

Memory	Bank 0 (slots J100 and J101)	Bank 1 (slots J102 and J103)
256 MB	two 64-MB DIMMs	two 64-MB DIMMs
256 MB	two 128-MB DIMMs	none
512 MB	Two 128-MB DIMMs	Two 128-MB DIMMs

How to remove DRAM DIMMs

Follow these steps to remove DRAM DIMMs.

Step	Action
1	Shut down the filer and turn off power to the filer. **Caution** Always use the `halt` command to perform a clean shutdown.
2	Put on the antistatic wrist strap and attach the grounding leash to an acceptable grounding unit.
3	Remove the power supply and cables, if necessary. **Caution** Always use the grounding strap before replacing or installing hardware components.
4	Loosen the six thumbscrews on the back panel and pull out the backplane carrier.

Step	Action
5	Locate the DRAM DIMM that you want to remove. 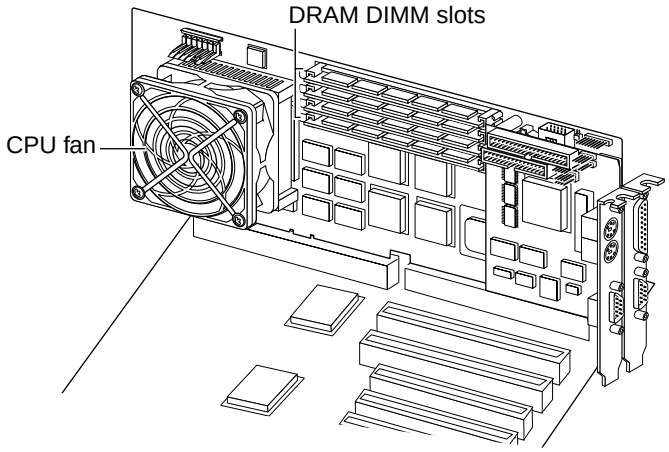
6	Press the DIMM ejector tab to push the DIMM part way out of its slot, as shown in the figure. 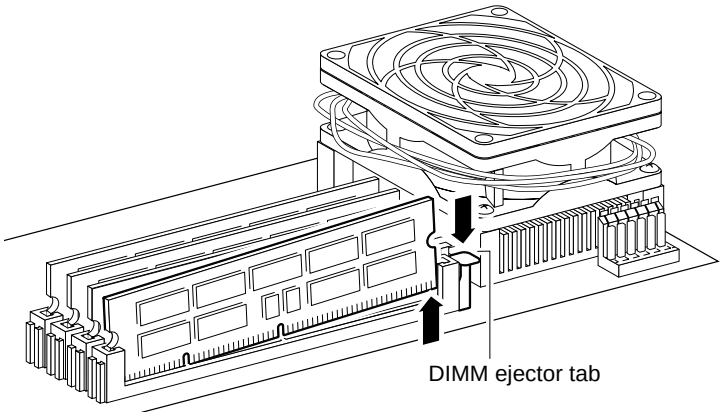
7	Pull the DIMM out of the slot.
8	Set the DIMM aside in an antistatic bag.
9	Repeat Steps 1 through 8 for the partner filer.

How to install DRAM DIMMs

Follow these steps to install DRAM DIMMs.

Step	Action
1	Locate the DIMM slots for the DIMMs you are installing. Refer to the figure in step 5 of "How to remove DRAM DIMMs" on page 71.
2	Holding the DIMM by the top corners to avoid damaging the components or the edge connector, turn the DIMM so that the locator notches on the edge connector are away from the DIMM ejector tab on the side of the slot.
3	Insert the DIMM straight into the slot, following the configuration directions in "How to configure the system memory" on page 70. The DIMM fits tightly in the slot, but should go in easily. If not, realign the DIMM with the slot and try again. **Caution** Visually inspect the DIMM to verify that it is evenly aligned and fully inserted into the slot; otherwise, the edge connector on the DIMM does not make complete contact with the slot.
4	Push carefully, but firmly on the top edge of the DIMM until you hear an audible "click" and the DIMM snaps into place.
5	Repeat Steps 1 through 4 for the partner filer.

Adding NVRAM in an F630

About the NVRAM configuration in an F630

The standard NVRAM configuration on an F630 filer is 8 MB with two 4-MB NVRAM SIMMs (8 MB) installed in Bank 0. The following figure shows slots 1 and 2 of Bank 0 filled with 4-MB NVRAM SIMMs.

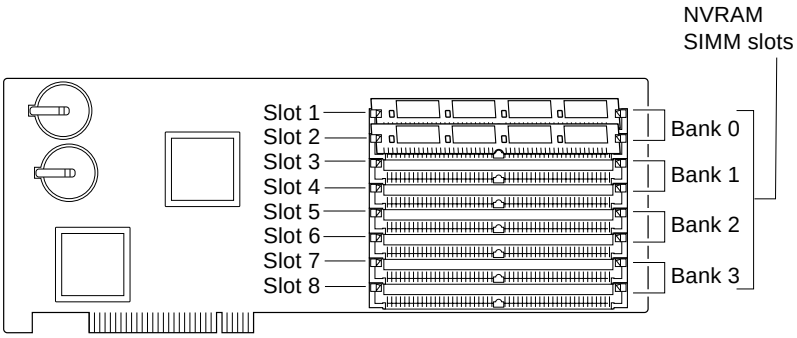

The maximum configuration supported by an F630 NVRAM adapter is 32 MB. A cluster requires 32 MB of NVRAM on each filer. You might have to add NVRAM SIMMs to one or both filers to meet this requirement. You can expand the NVRAM capacity to 32 MB by installing additional pairs of 4-MB NVRAM SIMMs in Banks 1 through 3.

How to install NVRAM SIMMs

To install NVRAM SIMMs, follow these steps.

Step	Action
1	Remove the NVRAM adapter from expansion slot 9 and set the adapter aside on an antistatic surface.
2	Hold the SIMM at the top corners to avoid damaging the components or the edge connector and turn the SIMM so that its locator notch is toward the lithium batteries.

Step	Action
3	Starting with the first unoccupied slot closest to the top edge of the NVRAM adapter, align the SIMM over the slot and then tilt the top edge of the SIMM at a slight angle toward the top edge of the NVRAM adapter. The following figure illustrates how to align a SIMM to insert it in a slot. 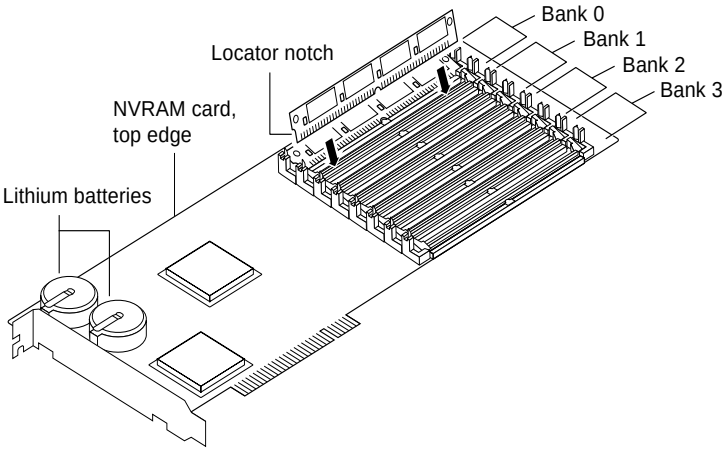
4	Insert the SIMM at an angle into the slot. The SIMM should slide into the slot easily if you wiggle the SIMM into position. If not, realign the SIMM with the slot and try again.

Step	Action
5	Push downward on the top edge of the SIMM until the mounting tabs close over the SIMM to lock it in place. The following figure illustrates how to lock an NVRAM SIMM in place in its slot. 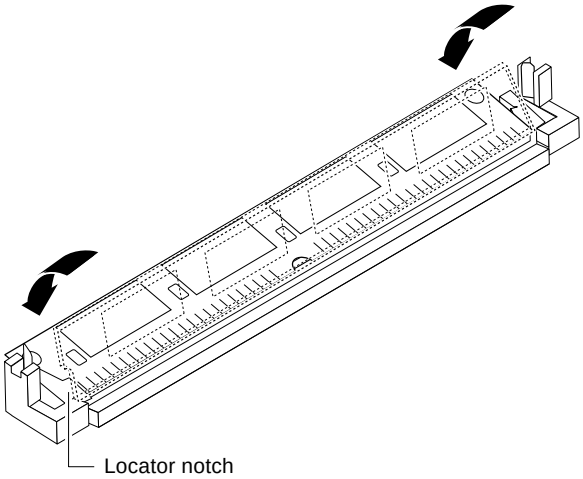 **Caution** Visually inspect the SIMM to verify that it is evenly aligned and fully inserted into the slot; otherwise, the SIMM could bend or break when pushed to the locked position.
6	When banks 0 through 3 are filled, reinstall the NVRAM adapter into its original slot.
7	Repeat Steps 1 through 6 for the partner filer.

Moving or replacing an adapter

About moving or replacing an adapter

For an F630: If you have a differential wide SCSI adapter for external tape devices installed in expansion slot 6, and if you are setting up a maximum cluster configuration, you need to move the adapter to expansion slot 2 or 4. This is to accommodate the installation of an FC-AL adapter in expansion slot 6.

For an F700: If you have a 64-bit FC-AL adapter installed in expansion slot 8, and if you are setting up a cluster configuration, you need to remove the adapter. This is to accommodate the installation of the cluster interconnect adapter in expansion slot 8. Refer to "Installing an FC-AL adapter" on page 16 for the installation of the 32-bit adapter.

How to remove an existing expansion adapter

To remove existing expansion adapters, follow these steps.

Step	Action
1	Shut down the filer and turn off power to the filer. **Caution** Always use the `halt` command to perform a clean shutdown.
2	Turn off the power to the disk shelves.
3	Unplug the AC power cord from the filer or appliance power supplies.
4	Note which cables are connected to the ports on the faceplate of the expansion adapter before disconnecting the cables. **Caution** Do not disconnect cables while the filer is powered up. You could cause permanent damage to the adapters in the filer or appliance.
5	Put on the antistatic wrist strap and attach the grounding leash to an acceptable grounding unit.

Step	Action
6	**For an F630:** Remove the screw holding the SCSI adapter faceplate to the back panel bracket and save it for reinstalling the adapter in expansion slot 2 or 4. **For an F700:** Remove the screw holding the 64-bit FC-AL adapter faceplate to the back panel bracket and save it for installing the cluster interconnect adapter.
7	Pull upward on the top edge of the expansion adapter and lift it out of the chassis, as shown. 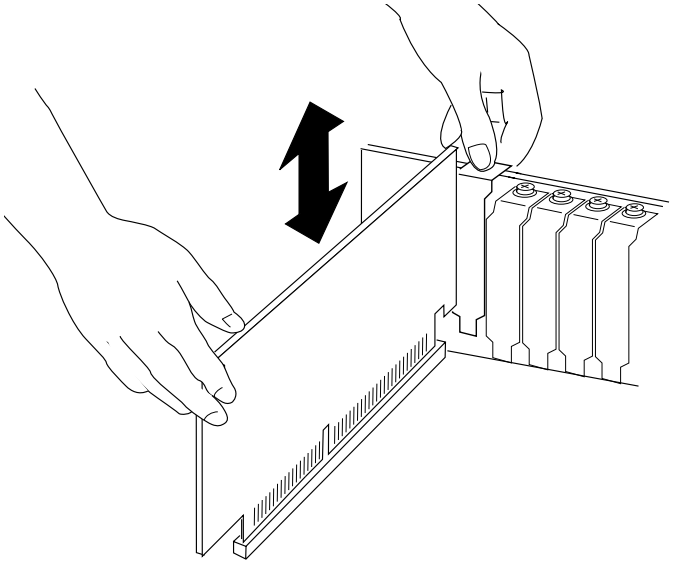
8	Place the adapter on an antistatic surface.
9	**For an F630:** Proceed to the next section if you are reinstalling your SCSI adapter for the tape drive in slot 2 or 4. **For an F700:** Proceed to Chapter 2, "Hardware Upgrade Process," on page 9 for the hardware upgrades.

How to install a SCSI adapter for external tape devices

To install a SCSI adapter for external tape devices, follow these steps.

Step	Action
1	Holding the SCSI adapter by its top edge, with the faceplate near your left hand, lower the adapter into the assigned expansion slot until its connector edge meets the grooves in the expansion slot, as shown in the figure on page 78. The faceplate of the adapter should be in position against the back panel, and should cover the endplate slot on the back panel.
2	Press carefully on the top edge of the adapter until the edge connector is seated in the expansion slot.
3	Replace the faceplate screw to secure the adapter to the back panel.
4	Reconnect the cables to the external connectors on the replacement expansion adapter.
5	Push in the system board or printed circuit board carrier and tighten the thumbscrews on the back panel.
6	Plug the AC power cord into the AC power cord receptacle on the power supply.
7	Turn on the filer and disk shelves.

Index

A

antistatic
- bag 72
- surface 74
- wrist strap 7

audience vii

C

cable
- for connecting disk shelves 37, 42

cable connections
- J39 miscellaneous interface cable 13
- J406 miscellaneous interface cable 12
- miscellaneous interface cable connector 12

Channel A
- minimum configuration 32

cluster 1
- configuring filers 61
- hardware upgrade to the disk shelf 9
- hardware upgrade to the filer 9
- licensing 59
- optional hardware upgrades 9
- required hardware 10

cluster interconnect adapter
- ports 14
- purpose 14
- removal of 14

configuration
- matching files 63
- matching interfaces 64
- matching parameters 62

conventions
- command vii
- formatting vii
- keyboard viii

conversion 1
- checklist for requirements 5
- cluster 1
- firmware 1
- hardware 1
- required process 2
- software 1

D

device carrier vii

disk shelf vii

DRAM DIMMs
- capacity configurations 71
- installation of 73
- location 70
- removal of 71
- requirements 70

E

expansion cards
- removal of 77
- replacement of 79

F

FC-AL adapter
- installation of 16
- maximum configuration 16
- minimum configuration 16

FC-AL daisy-chain cable 37, 42

Fibre Channel StorageShelf FC8 with 18-GB disks 30

Fibre Channel StorageShelf with 9-GB disks 30

filer vii

I

installation
- cluster interconnect adapter 14
- DRAM DIMMs 73
- FC-AL adapter 16
- NVRAM SIMMs 74

M

maximum configuration
- FC-AL adapter 16

minimum configuration
Channel A 32
FC-AL adapter 16

N

network interfaces
IP addresses 64
MAC addresses 64
NVRAM
maximum configuration 74
SIMMs 74
standard configuration 74

R

removal
DRAM DIMMs 71
expansion cards 77
requirements
DRAM DIMMs 70
hardware 10

S

setting disk shelf ID 37
special messages ix

T

terminology vii